REV C. Day - S 14/12/18 POSITIVE RECALL

Work Order ID 122134 *122134* PRELIMINARY ISSUE

July-10-14 9:24:45 AM

Item ID: D4680-041 **Accept** *N900040100* **Setup Start** *NS1*

Revision ID:

Item Name: Skidtube Assembly **Stop** *NS2*

Start Date: 7/10/14 **Start Qty:** 1.00 *1* **Cust Item ID:**

Required Date: 7/10/14 **Req'd Qty:** 1.00 *1* **Customer:**

Reference:

Run Start *NR1*

Approvals: **Process Plan:** MWJ **Date:** 14-07-10 **Tooling:** _____ **Date:** _____

QC: _____ **Date:** _____ **SPC (Y/N):** _____ **Date:** _____ **Stop** *NR2*

Sequence ID/ Work Center ID	Operation Description	Set Up/ Run Hours	Tool ID	Tool #	Plan Code	Accept Qty	Reject Qty	Reject Number	Insp. Stamp

Draw Nbr	Revision Nbr
D3492	E
D4680	~~pc2~~ Rev C. A.P. 14.12.17

110 0.00

110

CNC Bend 1 0.00

CNC Delta 100 Bender

Memo

1- Bend as per dwg D4680 using bend program D4680 and Folio: 26

Verify mesurement before cutting.

2- Cut FWD end as per dwg D4680

14-7-11

B122134

DQA: _____ Date: _____

DART AEROSPACE

WORK ORDER NON-CONFORMANCE / UPDATE

QA Closed: Date: Work Order update only ☐

Work Order: _____

Part No. _____

NCR No. _____

DISPOSITION

Rework ☐
Scrap ☐
Use-as-is ☐
Suspected Unapproved ☐

AGAINST DEPARTMENT/PROCESS

Skid-tube ☐ Crosstube ☐ Water Jet ☐ Engineering ☐
Machining ☐ Small Fab ☐ Prod. Eng. Coor. ☐ Quality ☐
Thermoforming ☐ Finishing ☐ Rec/Store/Packaging ☐ Other ☐
Large Fab ☐ Composite ☐ Supplier ☐

Root Cause		Date	Step	Qty	Description of work order update or non-conformance	Initial Chief Eng	Action Description	Sign & Date	Verification	QC Inspector
Design	☐									
Doc/Data	☐									
Equip/Tooling	☐									
Handling/Pre	☐									
Material	☐									
Operator	☐									
Offset/Setup	☐									
Process	☐									
Supplier	☐									
Training	☐									
Transport	☐									
Unapproved	☐									

FAULT CATEGORY

Landing Gear

☐ Bending
☐ Centre Not Concentric
☐ Cracks
☐ Crimp/Kink/Ripple/Wave
☐ Cuffs
☐ Crushing
☐ Heat Treat
☐ Inspection Strip in Tube
☐ Marks/Chatter
☐ Turning Sequence
☐ Wave/Twist in Tube

General

☐ Bend
☐ BOM/Route
☐ Broken/Damage/Defect
☐ Burrs
☐ Contamination
☐ Countersink
☐ Cut Too Short
☐ Drawing
☐ Drill Holes
☐ Finish
☐ Fit/Function
☐ Folio/Program
☐ Grain
☐ Hardware
☐ Inspection Incomplete/Unqualified
☐ Instructions Incomplete/Unclear
☐ Misaligned/off center
☐ Mislabeled
☐ Misread
☐ Off-set
☐ Out of Calibration
☐ Out of Sequence
☐ Outside Dimensions
☐ Over/Under tolerance
☐ Part Incorrect
☐ Part Lost/Missing
☐ Part Moved
☐ Positioned Wrong
☐ Power Loss/Surge
☐ Pressure/Forced
☐ Set-up
☐ Temperature/Cure
☐ Weld
☐ Wrong Stock Pulled
☐ Other

_____
_____
_____

Work Order ID 122134 *122134* ~~PRELIMINARY ISSUE~~

July-10-14 8:33:24 AM

Item ID: D4680-041 **Accept** *N900040100* **Setup Start** *NS1*

Revision ID: **Stop** *NS2*

Item Name: Skidtube Assembly

Start Date: 7/10/14 **Start Qty:** 1.00 *1* **Cust Item ID:**

Required Date: 7/10/14 **Req'd Qty:** 1.00 *1* **Customer:**

Reference:

Run Start *NR1*

Approvals: **Process Plan:** _____ **Date:** _____ **Tooling:** _____ **Date:** _____

QC: _____ **Date:** _____ **SPC (Y/N):** _____ **Date:** _____ **Stop** *NR2*

Sequence ID/ Work Center ID	Operation Description	Set Up/ Run Hours	Tool ID	Tool #	Plan Code	Accept Qty	Reject Qty	Reject Number	Insp. Stamp
120		0.00							
120	Skidtubes								
Skidtubes		0.00							
Skidtubes									

Memo

1-Cut Aft end as per dwg D4680

2-Deburr ends

3-Drill Aft & Fwd Cap holes using DT8678 & DT8901

4-Locate DT_____ & Drill Ground wire hole on top of Tube.

5-Locate DT_____ with #30 cleco in Ground wire hole ,then Pilot Drill all X-Bolt holes using #30" drill.****DO NOT OPEN AFT CAP HOLES*****

6-Open ground wire hole .297" (1 at fwd end & 2 at aft end at 21.06" ref.)

DAS 10 9-89 7~~-Deburr Rivet holes.~~

8- 3 most fwd x-bolt holes must be laid out manually, open to #30.

9-Open Aft & Fwd Cap holes using .208" drill.

10- Open X-Bolt holes to .750" (8 places) ***DO NOT OPEN HOLES TO SECTION G-G ***

DAS 10 9-89 11- Drill Rivet Holes as per Dwg D4680 using DT10065 ***DO NOT DRILL RIVET HOLES ON SECTION G-G (TWO PLACES)

12-Deburr holes.

DD 14-7-15

DQA: _____ Date: _____

WORK ORDER NON-CONFORMANCE / UPDATE

QA Closed: Date: Work Order update only ☐

Work Order: _____

Part No. _____

NCR No. _____

DISPOSITION

Rework ☐
Scrap ☐
Use-as-is ☐
Suspected Unapproved ☐

AGAINST DEPARTMENT/PROCESS

Skid-tube ☐ Crosstube ☐ Water Jet ☐ Engineering ☐
Machining ☐ Small Fab ☐ Prod. Eng. Coor. ☐ Quality ☐
Thermoforming ☐ Finishing ☐ Rec/Store/Packaging ☐ Other ☐
Large Fab ☐ Composite ☐ Supplier ☐

Root Cause		Date	Step	Qty	Description of work order update or non-conformance	Initial Chief Eng	Action Description	Sign & Date	Verification	QC Inspector
Design	☐									
Doc/Data	☐									
Equip/Tooling	☐									
Handling/Pre	☐									
Material	☐									
Operator	☐									
Offset/Setup	☐									
Process	☐									
Supplier	☐									
Training	☐									
Transport	☐									
Unapproved	☐									

FAULT CATEGORY

Landing Gear

☐ Bending
☐ Centre Not Concentric
☐ Cracks
☐ Crimp/Kink/Ripple/Wave
☐ Cuffs
☐ Crushing
☐ Heat Treat
☐ Inspection Strip in Tube
☐ Marks/Chatter
☐ Turning Sequence
☐ Wave/Twist in Tube

General

☐ Bend
☐ BOM/Route
☐ Broken/Damage/Defect
☐ Burrs
☐ Contamination
☐ Countersink
☐ Cut Too Short
☐ Drawing
☐ Drill Holes
☐ Finish
☐ Fit/Function
☐ Folio/Program
☐ Grain
☐ Hardware
☐ Inspection Incomplete/Unqualified
☐ Instructions Incomplete/Unclear
☐ Misaligned/off center
☐ Mislabeled
☐ Misread
☐ Off-set
☐ Out of Calibration
☐ Out of Sequence
☐ Outside Dimensions
☐ Over/Under tolerance
☐ Part Incorrect
☐ Part Lost/Missing
☐ Part Moved
☐ Positioned Wrong
☐ Power Loss/Surge
☐ Pressure/Forced
☐ Set-up
☐ Temperature/Cure
☐ Weld
☐ Wrong Stock Pulled
☐ Other _____

Item ID: D4680-041 **Accept** *N900040100* **Setup Start** *NS1*
Revision ID: **Stop** *NS2*
Item Name: Skidtube Assembly

Start Date: 7/10/14 **Start Qty:** 1.00 *1*
Required Date: 7/10/14 **Req'd Qty:** 1.00 *1*
Reference:

Cust Item ID:
Customer:

Approvals: **Process Plan:** _____ **Date:** _____ **Tooling:** _____ **Date:** _____
QC: _____ **Date:** _____ **SPC (Y/N):** _____ **Date:** _____

Run Start *NR1*
Stop *NR2*

Sequence ID/ Work Center ID	Operation Description	Set Up/ Run Hours	Tool ID	Tool #	Plan Code	Accept Qty	Reject Qty	Reject Number	Insp. Stamp
140	QC5- Inspect part completeness to step on W/O	0.00							
140 QC Quality Control	**Memo**	0.00							

DAS 27 9-89 14-8-15

150	Chemical Conversion Coat per QSI005 4.1	0.00							
150 HandFinish Hand Finishing	**Memo**	0.00							

14-7-15 DGC

160	QC7-Inspect Chemical Conversion Coat	0.00							
160 QC Quality Control	**Memo**	0.00							

14-7-16

DQA: _____ Date: _____

WORK ORDER NON-CONFORMANCE / UPDATE

QA Closed: Date: Work Order update only ☐

Work Order: _____

Part No. _____

NCR No. _____

DISPOSITION

Rework ☐
Scrap ☐
Use-as-is ☐
Suspected Unapproved ☐

AGAINST DEPARTMENT/PROCESS

Skid-tube ☐ Crosstube ☐ Water Jet ☐ Engineering ☐
Machining ☐ Small Fab ☐ Prod. Eng. Coor. ☐ Quality ☐
Thermoforming ☐ Finishing ☐ Rec/Store/Packaging ☐ Other ☐
Large Fab ☐ Composite ☐ Supplier ☐

Root Cause		Date	Step	Qty	Description of work order update or non-conformance	Initial Chief Eng	Action Description	Sign & Date	Verification	QC Inspector
Design	☐									
Doc/Data	☐									
Equip/Tooling	☐									
Handling/Pre	☐									
Material	☐									
Operator	☐									
Offset/Setup	☐									
Process	☐									
Supplier	☐									
Training	☐									
Transport	☐									
Unapproved	☐									

FAULT CATEGORY

Landing Gear

☐ Bending
☐ Centre Not Concentric
☐ Cracks
☐ Crimp/Kink/Ripple/Wave
☐ Cuffs
☐ Crushing
☐ Heat Treat
☐ Inspection Strip in Tube
☐ Marks/Chatter
☐ Turning Sequence
☐ Wave/Twist in Tube

General

☐ Bend
☐ BOM/Route
☐ Broken/Damage/Defect
☐ Burrs
☐ Contamination
☐ Countersink
☐ Cut Too Short
☐ Drawing
☐ Drill Holes
☐ Finish
☐ Fit/Function

☐ Folio/Program
☐ Grain
☐ Hardware
☐ Inspection Incomplete/Unqualified
☐ Instructions Incomplete/Unclear
☐ Misaligned/off center
☐ Mislabeled
☐ Misread
☐ Off-set
☐ Out of Calibration
☐ Out of Sequence

☐ Outside Dimensions
☐ Over/Under tolerance
☐ Part Incorrect
☐ Part Lost/Missing
☐ Part Moved
☐ Positioned Wrong
☐ Power Loss/Surge

☐ Pressure/Forced
☐ Set-up
☐ Temperature/Cure
☐ Weld
☐ Wrong Stock Pulled

☐ Other _____

Work Order ID 122134
July-10-14 8:33:24 AM

122134 ~~PRELIMINARY ISSUE~~

Item ID: D4680-041
Revision ID:
Item Name: Skidtube Assembly
Start Date: 7/10/14 **Start Qty:** 1.00 *1*
Required Date: 7/10/14 **Req'd Qty:** 1.00 *1*
Reference:

Accept *N900040100*
Setup Start *NS1*
Stop *NS2*
Cust Item ID:
Customer:

Approvals: **Process Plan:** _____ **Date:** _____ **Tooling:** _____ **Date:** _____
QC: _____ **Date:** _____ **SPC (Y/N):** _____ **Date:** _____

Run Start *NR1*
Stop *NR2*

Sequence ID/ Work Center ID	Operation Description	Set Up/ Run Hours	Tool ID	Tool #	Plan Code	Accept Qty	Reject Qty	Reject Number	Insp. Stamp
170		0.00							
170 Skidtubes	Skidtubes								
Skidtubes		0.00							

Memo

1- Bond web as per Dwg D4680 & QSI 015
A/R 241 Sike Flex Batch: 129457
Exp Date: 14-11-20
start time : 10:00 AM
end time: _____

DP 14-7-16

2- Seal all faying surfaces using proseal and rivet Doubler as per Dwg D4680.
A/R Proseal Batch: 128712
exp date: 14-10-30
LET IT CURE FOR 7HRS
START TIME: 9:00AM
FINISH TIME: _____

DP 14-7-17

3- Rivet doublers as per dwg

4- Open and chamfer holes on section G-G as per dwg. Blowout chips. ~~Shave rivet as required~~.

DP 14-7-21

DAS 10 9-89

5- Weld spacers into place as per section G-G ***BACK DRILL***
A/R ALUM. WELDING ROD: M12512 F and grind flush.

BE 14-07-21

6- Ream holes ~~detail E~~ section C-C as per dwg, deburr 8 places

7- Swage x-bolt spacers as per Dwg D4680 and ~~Detail~~ section C-C 8 places.

8- Trim/Grind flush per QSI 002

DP 14-7-22

DQA: _____ Date: _____

QA Closed: Date:

WORK ORDER NON-CONFORMANCE / UPDATE

DART AEROSPACE

Work Order update only ☐

Work Order: _____

Part No. _____

NCR No. _____

DISPOSITION

Rework ☐
Scrap ☐
Use-as-is ☐
Suspected Unapproved ☐

AGAINST DEPARTMENT/PROCESS

Skid-tube ☐ Crosstube ☐ Water Jet ☐ Engineering ☐
Machining ☐ Small Fab ☐ Prod. Eng. Coor. ☐ Quality ☐
Thermoforming ☐ Finishing ☐ Rec/Store/Packaging ☐ Other ☐
Large Fab ☐ Composite ☐ Supplier ☐

Root Cause		Date	Step	Qty	Description of work order update or non-conformance	Initial Chief Eng	Action Description	Sign & Date	Verification	QC Inspector
Design	☐									
Doc/Data	☐									
Equip/Tooling	☐									
Handling/Pre	☐									
Material	☐									
Operator	☐									
Offset/Setup	☐									
Process	☐									
Supplier	☐									
Training	☐									
Transport	☐									
Unapproved	☐									

FAULT CATEGORY

Landing Gear

☐ Bending
☐ Centre Not Concentric
☐ Cracks
☐ Crimp/Kink/Ripple/Wave
☐ Cuffs
☐ Crushing
☐ Heat Treat
☐ Inspection Strip in Tube
☐ Marks/Chatter
☐ Turning Sequence
☐ Wave/Twist in Tube

General

☐ Bend
☐ BOM/Route
☐ Broken/Damage/Defect
☐ Burrs
☐ Contamination
☐ Countersink
☐ Cut Too Short
☐ Drawing
☐ Drill Holes
☐ Finish
☐ Fit/Function

☐ Folio/Program
☐ Grain
☐ Hardware
☐ Inspection Incomplete/Unqualified
☐ Instructions Incomplete/Unclear
☐ Misaligned/off center
☐ Mislabeled
☐ Misread
☐ Off-set
☐ Out of Calibration
☐ Out of Sequence

☐ Outside Dimensions
☐ Over/Under tolerance
☐ Part Incorrect
☐ Part Lost/Missing
☐ Part Moved
☐ Positioned Wrong
☐ Power Loss/Surge

☐ Pressure/Forced
☐ Set-up
☐ Temperature/Cure
☐ Weld
☐ Wrong Stock Pulled

☐ Other _____

Item ID: D4680-041 **Accept** *N900040100* **Setup Start** *NS1*
Revision ID: **Stop** *NS2*
Item Name: Skidtube Assembly
Start Date: 7/10/14 **Start Qty:** 1.00 *1*
Required Date: 7/10/14 **Req'd Qty:** 1.00 *1*
Reference: **Cust Item ID:** **Customer:**

Approvals: **Process Plan:** _____ **Date:** _____ **Tooling:** _____ **Date:** _____
QC: _____ **Date:** _____ **SPC (Y/N):** _____ **Date:** _____

Run Start *NR1*
Stop *NR2*

Sequence ID/ Work Center ID	Operation Description	Set Up/ Run Hours	Tool ID	Tool #	Plan Code	Accept Qty	Reject Qty	Reject Number	Insp. Stamp
175	QC10- Inspect visual per QSI004- ground welds	0.00							
175									
QC	**Memo**	0.00							
Quality Control									
180	QC5- Inspect part completeness to step on W/O	0.00							
180									
QC	**Memo**	0.00							
Quality Control									
210	Pressure Wash per QSI005 4.3	0.00							
210									
HandFinish	**Memo**	0.00							
Hand Finishing	Re-alodine tube as per QSI 005 section 4.1.2.1 do not acid etch.								

DAS 27 9-89

1 7-29

DQA: _____ Date: _____

DART AEROSPACE

WORK ORDER NON-CONFORMANCE / UPDATE

QA Closed: Date: Work Order update only ☐

Work Order: _____

Part No. _____

NCR No. _____

DISPOSITION

Rework ☐
Scrap ☐
Use-as-is ☐
Suspected Unapproved ☐

AGAINST DEPARTMENT/PROCESS

Skid-tube ☐ Crosstube ☐ Water Jet ☐ Engineering ☐
Machining ☐ Small Fab ☐ Prod. Eng. Coor. ☐ Quality ☐
Thermoforming ☐ Finishing ☐ Rec/Store/Packaging ☐ Other ☐
Large Fab ☐ Composite ☐ Supplier ☐

Root Cause		Date	Step	Qty	Description of work order update or non-conformance	Initial Chief Eng	Action Description	Sign & Date	Verification	QC Inspector
Design	☐									
Doc/Data	☐									
Equip/Tooling	☐									
Handling/Pre	☐									
Material	☐									
Operator	☐									
Offset/Setup	☐									
Process	☐									
Supplier	☐									
Training	☐									
Transport	☐									
Unapproved	☐									

FAULT CATEGORY

Landing Gear

☐ Bending
☐ Centre Not Concentric
☐ Cracks
☐ Crimp/Kink/Ripple/Wave
☐ Cuffs
☐ Crushing
☐ Heat Treat
☐ Inspection Strip in Tube
☐ Marks/Chatter
☐ Turning Sequence
☐ Wave/Twist in Tube

General

☐ Bend
☐ BOM/Route
☐ Broken/Damage/Defect
☐ Burrs
☐ Contamination
☐ Countersink
☐ Cut Too Short
☐ Drawing
☐ Drill Holes
☐ Finish
☐ Fit/Function

☐ Folio/Program
☐ Grain
☐ Hardware
☐ Inspection Incomplete/Unqualified
☐ Instructions Incomplete/Unclear
☐ Misaligned/off center
☐ Mislabeled
☐ Misread
☐ Off-set
☐ Out of Calibration
☐ Out of Sequence

☐ Outside Dimensions
☐ Over/Under tolerance
☐ Part Incorrect
☐ Part Lost/Missing
☐ Part Moved
☐ Positioned Wrong
☐ Power Loss/Surge

☐ Pressure/Forced
☐ Set-up
☐ Temperature/Cure
☐ Weld
☐ Wrong Stock Pulled

☐ Other

_____
_____
_____

Work Order ID 122134 *122134* ~~PRELIMINARY ISSUE~~

July-10-14 8:33:24 AM

Item ID: D4680-041 **Accept** *N900040100* **Setup Start** *NS1*

Revision ID:

Item Name: Skidtube Assembly **Stop** *NS2*

Start Date: 7/10/14 **Start Qty:** 1.00 *1* **Cust Item ID:**

Required Date: 7/10/14 **Req'd Qty:** 1.00 *1* **Customer:**

Reference:

Run Start *NR1*

Approvals: **Process Plan:** _____ **Date:** _____ **Tooling:** _____ **Date:** _____

QC: _____ **Date:** _____ **SPC (Y/N):** _____ **Date:** _____ **Stop** *NR2*

Sequence ID/ Work Center ID	Operation Description	Set Up/ Run Hours	Tool ID	Tool #	Plan Code	Accept Qty	Reject Qty	Reject Number	Insp. Stamp
220 *220* SprayPaint Spray Painting 225 powder coat	CL 14/12/16 **Memo** 1- Apply Sherwin Williams Primer as per QSI 005 4.2 and dwg A/R Primer Batch:_____ 2- Paint two coats of Sherwin Williams Gloss White as per QSI 005 4.2 and dwg A/R Paint Batch:_____ 3- Apply two coats of Sherwin Williams Clear Coat as per QSI 005 4.2 and dwg A/R Clear Batch:_____	0.00 M129808. 0.00 White per attached Email	START: 7:40 OVEN: T: 320° FINISH: 810.			1	Ø.	14-12-16.	DAS 34 9-89
230 *230* QC Quality Control	QC 3 - Inspect Spray Paint **Memo**	0.00 0.00				1x	f	11/12/14	

DQA: _____ Date: _____

WORK ORDER NON-CONFORMANCE / UPDATE

QA Closed: Date: Work Order update only ☐

Work Order: _____

Part No. _____

NCR No. _____

DISPOSITION

Rework ☐
Scrap ☐
Use-as-is ☐
Suspected Unapproved ☐

AGAINST DEPARTMENT/PROCESS

Skid-tube ☐ Crosstube ☐ Water Jet ☐ Engineering ☐
Machining ☐ Small Fab ☐ Prod. Eng. Coor. ☐ Quality ☐
Thermoforming ☐ Finishing ☐ Rec/Store/Packaging ☐ Other ☐
Large Fab ☐ Composite ☐ Supplier ☐

Root Cause		Date	Step	Qty	Description of work order update or non-conformance	Initial Chief Eng	Action Description	Sign & Date	Verification	QC Inspector
Design	☐									
Doc/Data	☐									
Equip/Tooling	☐									
Handling/Pre	☐									
Material	☐									
Operator	☐									
Offset/Setup	☐									
Process	☐									
Supplier	☐									
Training	☐									
Transport	☐									
Unapproved	☐									

FAULT CATEGORY

Landing Gear

☐ Bending
☐ Centre Not Concentric
☐ Cracks
☐ Crimp/Kink/Ripple/Wave
☐ Cuffs
☐ Crushing
☐ Heat Treat
☐ Inspection Strip in Tube
☐ Marks/Chatter
☐ Turning Sequence
☐ Wave/Twist in Tube

General

☐ Bend
☐ BOM/Route
☐ Broken/Damage/Defect
☐ Burrs
☐ Contamination
☐ Countersink
☐ Cut Too Short
☐ Drawing
☐ Drill Holes
☐ Finish
☐ Fit/Function

☐ Folio/Program
☐ Grain
☐ Hardware
☐ Inspection Incomplete/Unqualified
☐ Instructions Incomplete/Unclear
☐ Misaligned/off center
☐ Mislabeled
☐ Misread
☐ Off-set
☐ Out of Calibration
☐ Out of Sequence

☐ Outside Dimensions
☐ Over/Under tolerance
☐ Part Incorrect
☐ Part Lost/Missing
☐ Part Moved
☐ Positioned Wrong
☐ Power Loss/Surge

☐ Pressure/Forced
☐ Set-up
☐ Temperature/Cure
☐ Weld
☐ Wrong Stock Pulled

☐ Other

_____
_____
_____

Work Order ID 122134

July-10-14 8:33:24 AM

122134

~~PRELIMINARY ISSUE~~

Item ID: D4680-041 **Accept** *N900040100* **Setup Start** *NS1*

Revision ID: **Stop** *NS2*

Item Name: Skidtube Assembly

Start Date: 7/10/14 **Start Qty:** 1.00 *1*

Required Date: 7/10/14 **Req'd Qty:** 1.00 *1*

Reference:

Cust Item ID:

Customer:

Run Start *NR1*

Stop *NR2*

Approvals: **Process Plan:** _____ **Date:** _____ **Tooling:** _____ **Date:** _____

QC: _____ **Date:** _____ **SPC (Y/N):** _____ **Date:** _____

Sequence ID/ Work Center ID	Operation Description	Set Up/ Run Hours	Tool ID	Tool #	Plan Code	Accept Qty	Reject Qty	Reject Number	Insp. Stamp
260	HandFinishing	0.00				1	0		14/12/17
260 HandFinish Hand Finishing	**Memo** NO WEARPLATES TO INSTALL A.R 14.12.17	0.00							

1- Install Wearplate & Ground Wire inserts as per Dwg D4680.

2-Inspect for Foreign objects

3- Install Fwd & Aft caps as per Dwg D4680 and Detail "A" & "B"
A/R 241 Sika Flex Batch: MU30327
Exp Date: 30/3/16

4- Assemble o'ring to plug as per dwg D3492-055 and apply o'ring lube
A/R 55-o'ring lube batch: M 12930

5- Wing Walk as per Dwg D4680 and QSI 005 4.4
Batch: M 130936

270	QC5- Inspect part completeness to step on W/O	0.00				1			SMP 14/12/18
270 QC Quality Control	**Memo**	0.00							

POSITIVE RECALL

EFFECTIVE MJ AUTH 14-07-10

RELEASED D DATE 14/12/18

Release Dwg as per Rev C SMP 14/12/18

DQA: _____ Date: _____

WORK ORDER NON-CONFORMANCE / UPDATE

QA Closed: Date: Work Order update only ☐

Work Order: _____

Part No. _____

NCR No. _____

DISPOSITION

Rework ☐
Scrap ☐
Use-as-is ☐
Suspected Unapproved ☐

AGAINST DEPARTMENT/PROCESS

Skid-tube ☐ Crosstube ☐ Water Jet ☐ Engineering ☐
Machining ☐ Small Fab ☐ Prod. Eng. Coor. ☐ Quality ☐
Thermoforming ☐ Finishing ☐ Rec/Store/Packaging ☐ Other ☐
Large Fab ☐ Composite ☐ Supplier ☐ ☐

Root Cause		Date	Step	Qty	Description of work order update or non-conformance	Initial Chief Eng	Action Description	Sign & Date	Verification	QC Inspector
Design	☐									
Doc/Data	☐									
Equip/Tooling	☐									
Handling/Pre	☐									
Material	☐									
Operator	☐									
Offset/Setup	☐									
Process	☐									
Supplier	☐									
Training	☐									
Transport	☐									
Unapproved	☐									

FAULT CATEGORY

Landing Gear

☐ Bending
☐ Centre Not Concentric
☐ Cracks
☐ Crimp/Kink/Ripple/Wave
☐ Cuffs
☐ Crushing
☐ Heat Treat
☐ Inspection Strip in Tube
☐ Marks/Chatter
☐ Turning Sequence
☐ Wave/Twist in Tube

General

☐ Bend
☐ BOM/Route
☐ Broken/Damage/Defect
☐ Burrs
☐ Contamination
☐ Countersink
☐ Cut Too Short
☐ Drawing
☐ Drill Holes
☐ Finish
☐ Fit/Function
☐ Folio/Program
☐ Grain
☐ Hardware
☐ Inspection Incomplete/Unqualified
☐ Instructions Incomplete/Unclear
☐ Misaligned/off center
☐ Mislabeled
☐ Misread
☐ Off-set
☐ Out of Calibration
☐ Out of Sequence
☐ Outside Dimensions
☐ Over/Under tolerance
☐ Part Incorrect
☐ Part Lost/Missing
☐ Part Moved
☐ Positioned Wrong
☐ Power Loss/Surge
☐ Pressure/Forced
☐ Set-up
☐ Temperature/Cure
☐ Weld
☐ Wrong Stock Pulled
☐ Other

Item ID: D4680-041 **Accept** *N900040100* **Setup Start** *NS1*
Revision ID: **Stop** *NS2*
Item Name: Skidtube Assembly
Start Date: 7/10/14 **Start Qty:** 1.00 *1*
Required Date: 7/10/14 **Req'd Qty:** 1.00 *1*
Reference: **Cust Item ID:** **Customer:**

Run Start *NR1*
Stop *NR2*

Approvals: **Process Plan:** _____ **Date:** _____ **Tooling:** _____ **Date:** _____
QC: _____ **Date:** _____ **SPC (Y/N):** _____ **Date:** _____

Sequence ID/ Work Center ID	Operation Description	Set Up/ Run Hours	Tool ID	Tool #	Plan Code	Accept Qty	Reject Qty	Reject Number	Insp. Stamp
280	Pick Kit	0.00	N/A						
280									
Packaging	**Memo**	0.00							
Packaging									
290	QC4- 100% Inspect kits for completeness	0.00	[illegible]	DAS 86 9-89		DEC 19 2014			
290									
QC	**Memo**	0.00							
Quality Control									
300	Identify as per dwg & Stock Location:_____	0.00	[illegible] 127200	DAS 86 9-89					
300	Packaging								
Packaging	**Memo**	0.00				DEC 19 2014			
Packaging									

DQA: _____ Date: _____

QA Closed: Date:

WORK ORDER NON-CONFORMANCE / UPDATE

DART AEROSPACE

Work Order update only ☐

Work Order: _____

Part No. _____

NCR No. _____

DISPOSITION

Rework ☐
Scrap ☐
Use-as-is ☐
Suspected Unapproved ☐

AGAINST DEPARTMENT/PROCESS

Skid-tube ☐ Crosstube ☐ Water Jet ☐ Engineering ☐
Machining ☐ Small Fab ☐ Prod. Eng. Coor. ☐ Quality ☐
Thermoforming ☐ Finishing ☐ Rec/Store/Packaging ☐ Other ☐
Large Fab ☐ Composite ☐ Supplier ☐

Root Cause		Date	Step	Qty	Description of work order update or non-conformance	Initial Chief Eng	Action Description	Sign & Date	Verification	QC Inspector
Design	☐									
Doc/Data	☐									
Equip/Tooling	☐									
Handling/Pre	☐									
Material	☐									
Operator	☐									
Offset/Setup	☐									
Process	☐									
Supplier	☐									
Training	☐									
Transport	☐									
Unapproved	☐									

FAULT CATEGORY

Landing Gear

☐ Bending
☐ Centre Not Concentric
☐ Cracks
☐ Crimp/Kink/Ripple/Wave
☐ Cuffs
☐ Crushing
☐ Heat Treat
☐ Inspection Strip in Tube
☐ Marks/Chatter
☐ Turning Sequence
☐ Wave/Twist in Tube

General

☐ Bend
☐ BOM/Route
☐ Broken/Damage/Defect
☐ Burrs
☐ Contamination
☐ Countersink
☐ Cut Too Short
☐ Drawing
☐ Drill Holes
☐ Finish
☐ Fit/Function

☐ Folio/Program
☐ Grain
☐ Hardware
☐ Inspection Incomplete/Unqualified
☐ Instructions Incomplete/Unclear
☐ Misaligned/off center
☐ Mislabeled
☐ Misread
☐ Off-set
☐ Out of Calibration
☐ Out of Sequence

☐ Outside Dimensions
☐ Over/Under tolerance
☐ Part Incorrect
☐ Part Lost/Missing
☐ Part Moved
☐ Positioned Wrong
☐ Power Loss/Surge

☐ Pressure/Forced
☐ Set-up
☐ Temperature/Cure
☐ Weld
☐ Wrong Stock Pulled

☐ Other _____

Work Order ID 122134 *122134* ~~PRELIMINARY ISSUE~~ Page 9

July-10-14 8:33:24 AM

Item ID: D4680-041 **Accept** *N900040100* **Setup Start** *NS1*

Revision ID:

Item Name: Skidtube Assembly **Stop** *NS2*

Start Date: 7/10/14 **Start Qty:** 1.00 *1* **Cust Item ID:**

Required Date: 7/10/14 **Req'd Qty:** 1.00 *1* **Customer:**

Reference:

Run Start *NR1*

Approvals: **Process Plan:** _____ **Date:** _____ **Tooling:** _____ **Date:** _____

QC: _____ **Date:** _____ **SPC (Y/N):** _____ **Date:** _____ **Stop** *NR2*

Sequence ID/ Work Center ID	Operation Description	Set Up/ Run Hours	Tool ID	Tool #	Plan Code	Accept Qty	Reject Qty	Reject Number	Insp. Stamp
310 *310*	QC21- Final Inspection - Work Order Release	0.00					15/1/5		
QC Quality Control	Memo	0.00							

MF 14-12-19

DQA: _____ Date: _____

WORK ORDER NON-CONFORMANCE / UPDATE

QA Closed: Date: Work Order update only ☐

Work Order: _____

Part No. _____

NCR No. _____

DISPOSITION

Rework ☐
Scrap ☐
Use-as-is ☐
Suspected Unapproved ☐

AGAINST DEPARTMENT/PROCESS

Skid-tube ☐ Crosstube ☐ Water Jet ☐ Engineering ☐
Machining ☐ Small Fab ☐ Prod. Eng. Coor. ☐ Quality ☐
Thermoforming ☐ Finishing ☐ Rec/Store/Packaging ☐ Other ☐
Large Fab ☐ Composite ☐ Supplier ☐

Root Cause		Date	Step	Qty	Description of work order update or non-conformance	Initial Chief Eng	Action Description	Sign & Date	Verification	QC Inspector
Design	☐									
Doc/Data	☐									
Equip/Tooling	☐									
Handling/Pre	☐									
Material	☐									
Operator	☐									
Offset/Setup	☐									
Process	☐									
Supplier	☐									
Training	☐									
Transport	☐									
Unapproved	☐									

FAULT CATEGORY

Landing Gear

☐ Bending
☐ Centre Not Concentric
☐ Cracks
☐ Crimp/Kink/Ripple/Wave
☐ Cuffs
☐ Crushing
☐ Heat Treat
☐ Inspection Strip in Tube
☐ Marks/Chatter
☐ Turning Sequence
☐ Wave/Twist in Tube

General

☐ Bend
☐ BOM/Route
☐ Broken/Damage/Defect
☐ Burrs
☐ Contamination
☐ Countersink
☐ Cut Too Short
☐ Drawing
☐ Drill Holes
☐ Finish
☐ Fit/Function

☐ Folio/Program
☐ Grain
☐ Hardware
☐ Inspection Incomplete/Unqualified
☐ Instructions Incomplete/Unclear
☐ Misaligned/off center
☐ Mislabeled
☐ Misread
☐ Off-set
☐ Out of Calibration
☐ Out of Sequence

☐ Outside Dimensions
☐ Over/Under tolerance
☐ Part Incorrect
☐ Part Lost/Missing
☐ Part Moved
☐ Positioned Wrong
☐ Power Loss/Surge

☐ Pressure/Forced
☐ Set-up
☐ Temperature/Cure
☐ Weld
☐ Wrong Stock Pulled

☐ Other _____

Picklist Print

July-10-14 8:33:27 AM

~~PRELIMINARY ISSUE~~ 5

Work Order ID: 122134

122134

Parent Item: D4680-041

D4680-041

Parent Item Name: Skidtube Assembly

Start Date: 7/10/14 **Required Date:** 7/10/14

Start Qty: 1.00 **Required Qty:** 1.00

Comments: IPP REV:A 13.04.16 NEW ISSUE DD VERF:JLM IPP REV:B 13.08.08 PB2 DD VERF:JLM IPP REV:C 13.09.10 PB3 DD VERF:JLM IPP REV:D 13.11.14 AS PER DWG REV.B DD VERF:JLM

Component Item ID/ Item Name	Replacement Item ID	Mfg/ Purch	Bin Item	Primary Location	Last Location	Route Seq ID	Unit of Measure	Qty on Hand	Qty per Kit	Total Qty	Qty Issued	Date Issued	Status
D2973		Manufactured	No				Each	66.0000		2			
D2973									**		BG 10-7-21		
Cross Bolt Spacer													
				Location			**Loc Qty**		**Loc Code**				
				LG001			66						
					107428		66			2			
D3492-15		Manufactured	No				Each	20.0000		4			
D3492-15									**		B122459 (JL) MM 14/12/17		
Plug													
				Location			**Loc Qty**		**Loc Code**				
				FP-001			20						
					115874		20						
REF (D3492-055)													
NAS1611-015		Purchased	No				Each	62.0000		4			
NAS1611-015									**		MM 14/12/17		
O-RING													
				Location			**Loc Qty**		**Loc Code**				
				FP001			62						
					m126637		62			VU			
REF (D3492-055)													

DQA: _____ Date: _____

WORK ORDER NON-CONFORMANCE / UPDATE

DART AEROSPACE

QA Closed: Date: Work Order update only ☐

Work Order: _____

Part No. _____

NCR No. _____

DISPOSITION

- Rework ☐
- Scrap ☐
- Use-as-is ☐
- Suspected Unapproved ☐

AGAINST DEPARTMENT/PROCESS

- Skid-tube ☐
- Machining ☐
- Thermoforming ☐
- Large Fab ☐
- Crosstube ☐
- Small Fab ☐
- Finishing ☐
- Composite ☐
- Water Jet ☐
- Prod. Eng. Coor. ☐
- Rec/Store/Packaging ☐
- Supplier ☐
- Engineering ☐
- Quality ☐
- Other ☐

Root Cause		Date	Step	Qty	Description of work order update or non-conformance	Initial Chief Eng	Action Description	Sign & Date	Verification	QC Inspector
Design	☐									
Doc/Data	☐									
Equip/Tooling	☐									
Handling/Pre	☐									
Material	☐									
Operator	☐									
Offset/Setup	☐									
Process	☐									
Supplier	☐									
Training	☐									
Transport	☐									
Unapproved	☐									

FAULT CATEGORY

Landing Gear

- ☐ Bending
- ☐ Centre Not Concentric
- ☐ Cracks
- ☐ Crimp/Kink/Ripple/Wave
- ☐ Cuffs
- ☐ Crushing
- ☐ Heat Treat
- ☐ Inspection Strip in Tube
- ☐ Marks/Chatter
- ☐ Turning Sequence
- ☐ Wave/Twist in Tube

General

- ☐ Bend
- ☐ BOM/Route
- ☐ Broken/Damage/Defect
- ☐ Burrs
- ☐ Contamination
- ☐ Countersink
- ☐ Cut Too Short
- ☐ Drawing
- ☐ Drill Holes
- ☐ Finish
- ☐ Fit/Function
- ☐ Folio/Program
- ☐ Grain
- ☐ Hardware
- ☐ Inspection Incomplete/Unqualified
- ☐ Instructions Incomplete/Unclear
- ☐ Misaligned/off center
- ☐ Mislabeled
- ☐ Misread
- ☐ Off-set
- ☐ Out of Calibration
- ☐ Out of Sequence
- ☐ Outside Dimensions
- ☐ Over/Under tolerance
- ☐ Part Incorrect
- ☐ Part Lost/Missing
- ☐ Part Moved
- ☐ Positioned Wrong
- ☐ Power Loss/Surge
- ☐ Pressure/Forced
- ☐ Set-up
- ☐ Temperature/Cure
- ☐ Weld
- ☐ Wrong Stock Pulled
- ☐ Other _____

PRELIMINARY ISSUE

Work Order ID: 122134 *122134*

Parent Item: D4680-041 *D4680-041*

Parent Item Name: Skidtube Assembly

Start Date: 7/10/14 **Required Date:** 7/10/14

Start Qty: 1.00 **Required Qty:** 1.00

D2962-150 Manufactured No Each 46.0000 1

D2962-150 ** DP 14-7-11

3.540 Outer Tube, Extrut

Location	Loc Qty	Loc Code
HALL	46	
90871	46	

7

D4681-041 Manufactured No Each 1.0000 1

D4681-041 ** DP 14-7-11

Web Assembly

Location	Loc Qty	Loc Code
LG002	1	
107119 NOTE REV: PB2	1	

1

D4686-1 Manufactured No Each 114.0000 8

D4686-1 ** DP 14-7-22

Spacer

Location	Loc Qty	Loc Code
LG001	110	
107104	110	
ST118	4	
97772	4	

8

D4753-1 Manufactured No Each 45.0000 16

D4753-1 ** DP 14-7-17

Doubler

Location	Loc Qty	Loc Code
LG001	45	
100674	7	
100930	38	

16

DQA: _____ Date: _____

DART AEROSPACE

WORK ORDER NON-CONFORMANCE / UPDATE

QA Closed: Date: Work Order update only ☐

Work Order: _____

Part No. _____

NCR No. _____

DISPOSITION

Rework ☐
Scrap ☐
Use-as-is ☐
Suspected Unapproved ☐

AGAINST DEPARTMENT/PROCESS

Skid-tube ☐ Crosstube ☐ Water Jet ☐ Engineering ☐
Machining ☐ Small Fab ☐ Prod. Eng. Coor. ☐ Quality ☐
Thermoforming ☐ Finishing ☐ Rec/Store/Packaging ☐ Other ☐
Large Fab ☐ Composite ☐ Supplier ☐

Root Cause		Date	Step	Qty	Description of work order update or non-conformance	Initial Chief Eng	Action Description	Sign & Date	Verification	QC Inspector
Design	☐									
Doc/Data	☐									
Equip/Tooling	☐									
Handling/Pre	☐									
Material	☐									
Operator	☐									
Offset/Setup	☐									
Process	☐									
Supplier	☐									
Training	☐									
Transport	☐									
Unapproved	☐									

FAULT CATEGORY

Landing Gear

☐ Bending
☐ Centre Not Concentric
☐ Cracks
☐ Crimp/Kink/Ripple/Wave
☐ Cuffs
☐ Crushing
☐ Heat Treat
☐ Inspection Strip in Tube
☐ Marks/Chatter
☐ Turning Sequence
☐ Wave/Twist in Tube

General

☐ Bend
☐ BOM/Route
☐ Broken/Damage/Defect
☐ Burrs
☐ Contamination
☐ Countersink
☐ Cut Too Short
☐ Drawing
☐ Drill Holes
☐ Finish
☐ Fit/Function

☐ Folio/Program
☐ Grain
☐ Hardware
☐ Inspection Incomplete/Unqualified
☐ Instructions Incomplete/Unclear
☐ Misaligned/off center
☐ Mislabeled
☐ Misread
☐ Off-set
☐ Out of Calibration
☐ Out of Sequence

☐ Outside Dimensions
☐ Over/Under tolerance
☐ Part Incorrect
☐ Part Lost/Missing
☐ Part Moved
☐ Positioned Wrong
☐ Power Loss/Surge

☐ Pressure/Forced
☐ Set-up
☐ Temperature/Cure
☐ Weld
☐ Wrong Stock Pulled

☐ Other _____

PRELIMINARY ISSUE

Work Order ID: 122134 *122134*

Parent Item: D4680-041 *D4680-041*

Parent Item Name: Skidtube Assembly

Start Date: 7/10/14 **Required Date:** 7/10/14

Start Qty: 1.00 **Required Qty:** 1.00

AELS-1032-130 AELS8-1032-130 Purchased No Each 67.0000 3

AELS-1032-130 ✓ ** (x3) [illegible] 11/12/17

Rivnut

AELS-1032-130 M128649

Location		Loc Qty	Loc Code	
ST280		67		
	m128179	67		

AN3C4A Purchased No Each 3,513.000 3

AN3C4A ** [illegible] 11/12/17

Bolt

Location		Loc Qty	Loc Code	
FG		20		
	122814	20	M130716	x3
ST350		3493		
	124221	12		
	125388	3		
	M127410	1		
	M127832	62		
	M128606	32		
	M128634	8		
	M128739	4		
	M128879	871		
	M129520	2500		

DQA: _____ Date: _____

WORK ORDER NON-CONFORMANCE / UPDATE

QA Closed: Date:

Work Order update only ☐

Work Order: _____

Part No. _____

NCR No. _____

DISPOSITION

Rework ☐
Scrap ☐
Use-as-is ☐
Suspected Unapproved ☐

AGAINST DEPARTMENT/PROCESS

Skid-tube ☐ Crosstube ☐ Water Jet ☐ Engineering ☐
Machining ☐ Small Fab ☐ Prod. Eng. Coor. ☐ Quality ☐
Thermoforming ☐ Finishing ☐ Rec/Store/Packaging ☐ Other ☐
Large Fab ☐ Composite ☐ Supplier ☐

Root Cause		Date	Step	Qty	Description of work order update or non-conformance	Initial Chief Eng	Action Description	Sign & Date	Verification	QC Inspector
Design	☐									
Doc/Data	☐									
Equip/Tooling	☐									
Handling/Pre	☐									
Material	☐									
Operator	☐									
Offset/Setup	☐									
Process	☐									
Supplier	☐									
Training	☐									
Transport	☐									
Unapproved	☐									

FAULT CATEGORY

Landing Gear

☐ Bending
☐ Centre Not Concentric
☐ Cracks
☐ Crimp/Kink/Ripple/Wave
☐ Cuffs
☐ Crushing
☐ Heat Treat
☐ Inspection Strip in Tube
☐ Marks/Chatter
☐ Turning Sequence
☐ Wave/Twist in Tube

General

☐ Bend
☐ BOM/Route
☐ Broken/Damage/Defect
☐ Burrs
☐ Contamination
☐ Countersink
☐ Cut Too Short
☐ Drawing
☐ Drill Holes
☐ Finish
☐ Fit/Function

☐ Folio/Program
☐ Grain
☐ Hardware
☐ Inspection Incomplete/Unqualified
☐ Instructions Incomplete/Unclear
☐ Misaligned/off center
☐ Mislabeled
☐ Misread
☐ Off-set
☐ Out of Calibration
☐ Out of Sequence

☐ Outside Dimensions
☐ Over/Under tolerance
☐ Part Incorrect
☐ Part Lost/Missing
☐ Part Moved
☐ Positioned Wrong
☐ Power Loss/Surge

☐ Pressure/Forced
☐ Set-up
☐ Temperature/Cure
☐ Weld
☐ Wrong Stock Pulled

☐ Other _____

Work Order ID: 122134
122134

Parent Item: D4680-041
D4680-041

Parent Item Name: Skidtube Assembly

Start Date: 7/10/14 **Required Date:** 7/10/14

Start Qty: 1.00 **Required Qty:** 1.00

NAS1149F0332P Purchased No Each 4,280.000 5

NAS1149F0332P

Washer

**

Location	Loc Qty	Loc Code	
ST275	4280		
122063	205		
123900	12		
125646	106		
m123185	47		
m127831	2500		x5
m128401	1110		
m129541	300		

MS20601-AD4W3 Purchased No Each 776.0000 32

MS20601-AD4W3

Rivet

**

Location	Loc Qty	Loc Code	
ST310	776		
114538	500		
124331	220		32
124365	56		

14-7-17

D2965 Manufactured No Each 18.0000 1

D2965

Cap

**

Location	Loc Qty	Loc Code	
FP001	18		
99551	18		X1

DQA: _____ Date: _____

QA Closed: Date:

WORK ORDER NON-CONFORMANCE / UPDATE

DART AEROSPACE

Work Order update only ☐

Work Order: _____

Part No. _____

NCR No. _____

DISPOSITION

- Rework ☐
- Scrap ☐
- Use-as-is ☐
- Suspected Unapproved ☐

AGAINST DEPARTMENT/PROCESS

- Skid-tube ☐
- Machining ☐
- Thermoforming ☐
- Large Fab ☐
- Crosstube ☐
- Small Fab ☐
- Finishing ☐
- Composite ☐
- Water Jet ☐
- Prod. Eng. Coor. ☐
- Rec/Store/Packaging ☐
- Supplier ☐
- Engineering ☐
- Quality ☐
- Other ☐

Root Cause		Date	Step	Qty	Description of work order update or non-conformance	Initial Chief Eng	Action Description	Sign & Date	Verification	QC Inspector
Design	☐									
Doc/Data	☐									
Equip/Tooling	☐									
Handling/Pre	☐									
Material	☐									
Operator	☐									
Offset/Setup	☐									
Process	☐									
Supplier	☐									
Training	☐									
Transport	☐									
Unapproved	☐									

FAULT CATEGORY

Landing Gear

- ☐ Bending
- ☐ Centre Not Concentric
- ☐ Cracks
- ☐ Crimp/Kink/Ripple/Wave
- ☐ Cuffs
- ☐ Crushing
- ☐ Heat Treat
- ☐ Inspection Strip in Tube
- ☐ Marks/Chatter
- ☐ Turning Sequence
- ☐ Wave/Twist in Tube

General

- ☐ Bend
- ☐ BOM/Route
- ☐ Broken/Damage/Defect
- ☐ Burrs
- ☐ Contamination
- ☐ Countersink
- ☐ Cut Too Short
- ☐ Drawing
- ☐ Drill Holes
- ☐ Finish
- ☐ Fit/Function
- ☐ Folio/Program
- ☐ Grain
- ☐ Hardware
- ☐ Inspection Incomplete/Unqualified
- ☐ Instructions Incomplete/Unclear
- ☐ Misaligned/off center
- ☐ Mislabeled
- ☐ Misread
- ☐ Off-set
- ☐ Out of Calibration
- ☐ Out of Sequence
- ☐ Outside Dimensions
- ☐ Over/Under tolerance
- ☐ Part Incorrect
- ☐ Part Lost/Missing
- ☐ Part Moved
- ☐ Positioned Wrong
- ☐ Power Loss/Surge
- ☐ Pressure/Forced
- ☐ Set-up
- ☐ Temperature/Cure
- ☐ Weld
- ☐ Wrong Stock Pulled
- ☐ Other

_____

_____

_____

PRELIMINARY ISSUE

Work Order ID: 122134
122134
Parent Item: D4680-041
D4680-041
Parent Item Name: Skidtube Assembly

Start Date: 7/10/14 **Required Date:** 7/10/14
Start Qty: 1.00 **Required Qty:** 1.00

AN3C5A	Purchased	No		Each	643.0000	2

AN3C5A
Bolt

**

Location	Loc Qty	Loc Code	
FG	5	M130851	X2
122800	5		
ST350	638		
M128911	598		
M128973	10		
M129198	30		

AN526C1032-10	Purchased	No		Each	96.0000	2

AN526C1032-10
Screw

**

Location	Loc Qty	Loc Code	
ST327	96	~~M125752~~	X2
125752	96	M125752	

D2965-3	Manufactured	No		Each	7.0000	1

D2965-3
Cap

**

Location	Loc Qty	Loc Code	
FP001	7		
98923	7	B198923	X1

DQA: _____ Date: _____

DART AEROSPACE

WORK ORDER NON-CONFORMANCE / UPDATE

QA Closed: Date: Work Order update only ☐

Work Order: _____

Part No. _____

NCR No. _____

DISPOSITION

Rework ☐
Scrap ☐
Use-as-is ☐
Suspected Unapproved ☐

AGAINST DEPARTMENT/PROCESS

Skid-tube ☐ Crosstube ☐ Water Jet ☐ Engineering ☐
Machining ☐ Small Fab ☐ Prod. Eng. Coor. ☐ Quality ☐
Thermoforming ☐ Finishing ☐ Rec/Store/Packaging ☐ Other ☐
Large Fab ☐ Composite ☐ Supplier ☐

Root Cause		Date	Step	Qty	Description of work order update or non-conformance	Initial Chief Eng	Action Description	Sign & Date	Verification	QC Inspector
Design	☐									
Doc/Data	☐									
Equip/Tooling	☐									
Handling/Pre	☐									
Material	☐									
Operator	☐									
Offset/Setup	☐									
Process	☐									
Supplier	☐									
Training	☐									
Transport	☐									
Unapproved	☐									

FAULT CATEGORY

Landing Gear

☐ Bending
☐ Centre Not Concentric
☐ Cracks
☐ Crimp/Kink/Ripple/Wave
☐ Cuffs
☐ Crushing
☐ Heat Treat
☐ Inspection Strip in Tube
☐ Marks/Chatter
☐ Turning Sequence
☐ Wave/Twist in Tube

General

☐ Bend
☐ BOM/Route
☐ Broken/Damage/Defect
☐ Burrs
☐ Contamination
☐ Countersink
☐ Cut Too Short
☐ Drawing
☐ Drill Holes
☐ Finish
☐ Fit/Function
☐ Folio/Program
☐ Grain
☐ Hardware
☐ Inspection Incomplete/Unqualified
☐ Instructions Incomplete/Unclear
☐ Misaligned/off center
☐ Mislabeled
☐ Misread
☐ Off-set
☐ Out of Calibration
☐ Out of Sequence
☐ Outside Dimensions
☐ Over/Under tolerance
☐ Part Incorrect
☐ Part Lost/Missing
☐ Part Moved
☐ Positioned Wrong
☐ Power Loss/Surge
☐ Pressure/Forced
☐ Set-up
☐ Temperature/Cure
☐ Weld
☐ Wrong Stock Pulled
☐ Other

_____
_____
_____

PRELIMINARY ISSUE

ITEM	QTY -041	P/N	DESCRIPTION
	X	D4680-041	SKIDTUBE
1	1	D4680-043	SKIDTUBE
2	1	D2965	CAP
3	1	D2965-3	CAP
4	4	D3492-055	PLUG ASSY
5	2	NAS1149F0332P	WASHER (AN960-10L)
6	2	NASM3C5A	BOLT (AN3C5A)
7	2	NASM526C1032R10	SCREW (MS526C1032R10)

SHOP COPY
RETURN TO
ENGINEERING
UNCONTROLLED COPY
SUBJECT TO AMENDMENT
WITHOUT NOTICE
WORK ORDER
NO. 122134 MCJ
1407-10

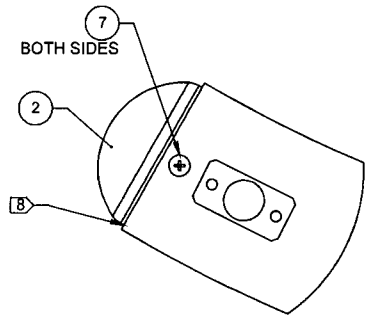

DETAIL A
SCALE 4X

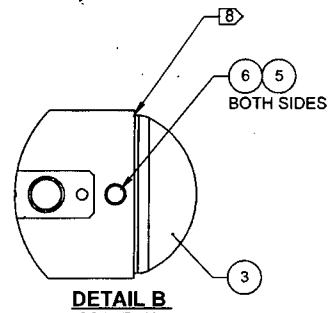

DETAIL B
SCALE 4X

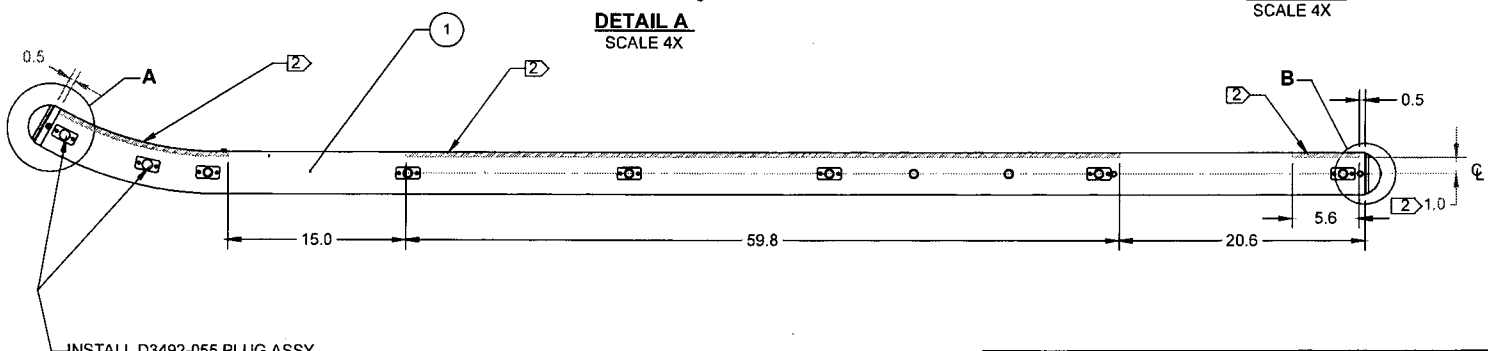

D4680-041 SKIDTUBE

NOTES:
1) MATERIAL: N/A
2) FINISH: PAINT TOP SURFACE OF SKIDTUBE WITH MIL-W-5044 ANTI-SKID PAINT (WING WALK) AS INDICATED TO 1.00 ABOVE CENTERLINE PER QSI 005 SECTION 4.4
3) TOLERANCES: PER DART QSI 018 UNLESS OTHERWISE NOTED
4) UNITS: INCHES UNLESS OTHERWISE NOTED
5) BREAK SHARP EDGES: N/A
6) IDENTIFICATION: IDENTIFY WITH DART P/N "D4680-041" AND B/N PER QSI 044 METHOD 6.4 ON INNER RADIUS OF SKIDTUBE BEFORE INSTALLING D2965 CAP
7) WEIGHT: 18.56 lbs
8) SEAL FAYING SURFACES WITH SIKAFLEX -241/-291 OR PROSEAL 890 OR MIL-S-8802 CLASS B-2 SEALANT

REV.	DESCRIPTION	BY	DATE
C	NAS1149F0332P WAS AN960-10L, NASM3C5A WAS AN3C5A, NASM526C1032R10 WAS AN526C1032-10, FWD GROUNDING STRAP FASTENER MOVED AFT (C5-3)	AP	14.02.26
B	FWD CAP WAS D2965 NOW D2965-3, VARIOUS DIMENSIONAL CHANGES. D3492-055 PLUG ASSY WAS D3492-051, SWAGING DIMENSION NOW 0.650 WAS 0.661 (D6-2), ADDED DETAIL H (C2-3), MATERIAL D2962-150 WAS D2962-131 (A7-3), GROUND HANDLING THRU HOLES NOW WELDED, ADDED SECTION G-G (D3-2)	AP	13.09.10
A	NEW ISSUE	AP	13.02.13

PRELIMINARY ISSUE

DESIGN	AP	DART AEROSPACE USA, INC. KENT, WA
DRAWN	AP	
CHECKED	AJS	DRAWING NO. D4680 REV. C2
MFG. APPR.	DD	SHEET 1 OF 3
APPROVED		TITLE SKIDTUBE SCALE NTS
DE APPR.		
DATE	14.02.26	

COPYRIGHT © 2013 BY DART AEROSPACE USA, INC.
THIS DOCUMENT IS PRIVATE AND CONFIDENTIAL AND IS SUPPLIED ON THE EXPRESS CONDITION THAT IT IS NOT TO BE USED FOR ANY PURPOSE OR COPIED OR COMMUNICATED TO ANY OTHER PERSON WITHOUT WRITTEN PERMISSION FROM DART AEROSPACE USA, INC.

DQA: _____ Date: _____

DART AEROSPACE

WORK ORDER NON-CONFORMANCE / UPDATE

QA Closed: Date: Work Order update only ☐

Work Order: _____

Part No. _____

NCR No. _____

DISPOSITION

Rework ☐
Scrap ☐
Use-as-is ☐
Suspected Unapproved ☐

AGAINST DEPARTMENT/PROCESS

Skid-tube ☐ Crosstube ☐ Water Jet ☐ Engineering ☐
Machining ☐ Small Fab ☐ Prod. Eng. Coor. ☐ Quality ☐
Thermoforming ☐ Finishing ☐ Rec/Store/Packaging ☐ Other ☐
Large Fab ☐ Composite ☐ Supplier ☐ ☐

Root Cause		Date	Step	Qty	Description of work order update or non-conformance	Initial Chief Eng	Action Description	Sign & Date	Verification	QC Inspector
Design	☐									
Doc/Data	☐									
Equip/Tooling	☐									
Handling/Pre	☐									
Material	☐									
Operator	☐									
Offset/Setup	☐									
Process	☐									
Supplier	☐									
Training	☐									
Transport	☐									
Unapproved	☐									

FAULT CATEGORY

Landing Gear

☐ Bending
☐ Centre Not Concentric
☐ Cracks
☐ Crimp/Kink/Ripple/Wave
☐ Cuffs
☐ Crushing
☐ Heat Treat
☐ Inspection Strip in Tube
☐ Marks/Chatter
☐ Turning Sequence
☐ Wave/Twist in Tube

General

☐ Bend
☐ BOM/Route
☐ Broken/Damage/Defect
☐ Burrs
☐ Contamination
☐ Countersink
☐ Cut Too Short
☐ Drawing
☐ Drill Holes
☐ Finish
☐ Fit/Function

☐ Folio/Program
☐ Grain
☐ Hardware
☐ Inspection Incomplete/Unqualified
☐ Instructions Incomplete/Unclear
☐ Misaligned/off center
☐ Mislabeled
☐ Misread
☐ Off-set
☐ Out of Calibration
☐ Out of Sequence

☐ Outside Dimensions
☐ Over/Under tolerance
☐ Part Incorrect
☐ Part Lost/Missing
☐ Part Moved
☐ Positioned Wrong
☐ Power Loss/Surge

☐ Pressure/Forced
☐ Set-up
☐ Temperature/Cure
☐ Weld
☐ Wrong Stock Pulled

☐ Other _____

PRELIMINARY ISSUE

ITEM	QTY -043	P/N	DESCRIPTION
	X	D4680-043	SKIDTUBE SUB ASSY
1	1	D4680-1	SKIDTUBE
2	2	D2973	SPACER
3	1	D4681-041	WEB ASSY
4	8	D4686-1	SPACER
5	16	D4753-1	DOUBLER
6	3	AELS-1032-130	RIVET NUT
7	3	NAS1149F0332P	WASHER (AN960-10L)
8	32	NASM20601AD4W3	RIVET, BLIND, CSK (MS20601AD4W3)
9	3	NASM3C4A	BOLT (AN3C4A)

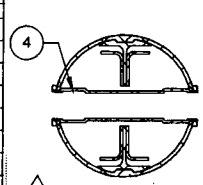

INSTALL D4686-1 SPACER AS FOLLOWS (8 PL)
AFTER INSTALLING D4753-1 DOUBLERS PER DETAIL D
1. INSERT D4686-1 SPACER
2. SWAGE TO Ø0.650 +0.010/-0.000 X 1.0 DEEP PER QSI 002
3. TRIM/GRIND FLUSH PER QSI 002

SECTION C-C 10
SCALE 4X
8 PL

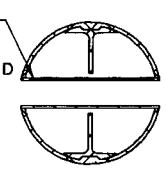

INSTALL D2973 SPACER AS FOLLOWS (2 PL)
1. CHAMFER HOLE 0.030X45 DEG
2. INSERT D2973 SPACER
3. WELD INTO PLACE AND GRIND FLUSH
4. PASS Ø0.625 DRILL TO REMOVE SPILL OVER

SECTION G-G 11
SCALE 4X
2 PL

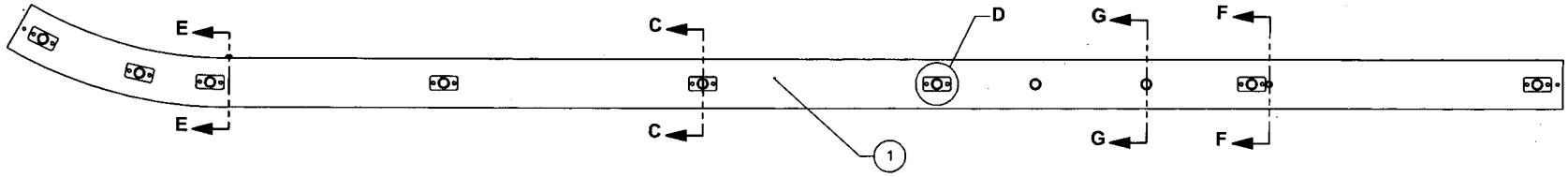

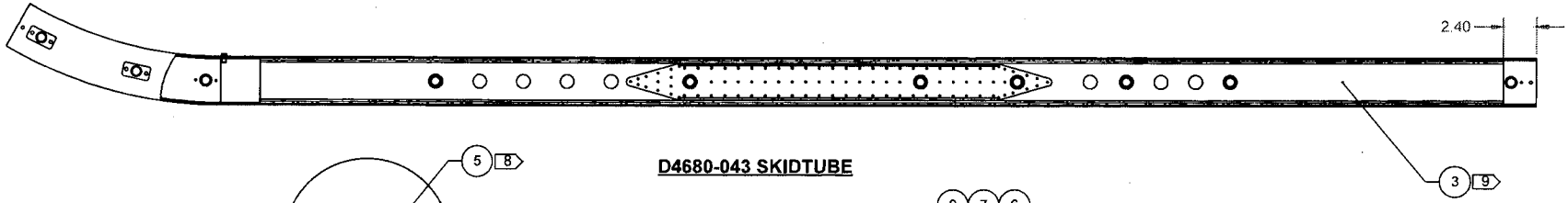

D4680-043 SKIDTUBE

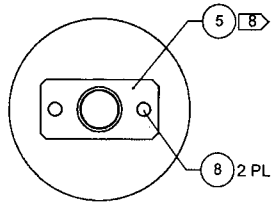

DETAIL D
16 PL (BOTH SIDES)
SCALE 4X

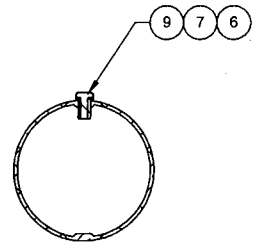

SECTION E-E
SCALE 2.5X

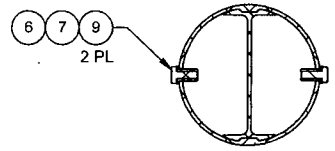

SECTION F-F
SCALE 2.5X

NOTES:
1) MATERIAL: N/A
2) FINISH: APPLY CHEMICAL CONVERSION COATING PER DART QSI 005 4.1 PRIOR TO INSTALLING D4681-041 WEB. POWDER COAT WHITE (REF 4.3.5.1) PER DART QSI 005 4.3
3) TOLERANCES: PER DART QSI 018 UNLESS OTHERWISE NOTED
4) UNITS: INCHES UNLESS OTHERWISE NOTED
5) BREAK SHARP EDGES: N/A
6) IDENTIFICATION: NONE
7) WEIGHT: 17.90 lbs
8) SEAL ALL MATING SURFACES USING PROSEAL 890 OR MIL-S-8802 CLASS B2 SEALANT
9) INSERT D4681-041 WEB INTO D4680-1 SKIDTUBE IN LOCATION SHOWN OFF AFT END OF SKIDTUBE AND BOND WEB INTO OUTER TUBE WITH NON-STRUCTURAL SIKAFLEX -241/-291 ADHESIVE PER DART QSI 015
10) INSTALL D4686-1 SPACER AFTER INSTALLING D4753-1 DOUBLERS
11) WELDING: PER QSI 004

PRELIMINARY ISSUE

DESIGN	AP	DART AEROSPACE USA, INC. KENT, WA
DRAWN	AP	
CHECKED	AJS	DRAWING NO. D4680 REV. C2
MFG. APPR.	DD	SHEET 2 OF 3
APPROVED		TITLE SKIDTUBE SCALE NTS
DE APPR.		
DATE	14.02.26	

COPYRIGHT © 2013 BY DART AEROSPACE USA, INC.
THIS DOCUMENT IS PRIVATE AND CONFIDENTIAL AND IS SUPPLIED ON THE EXPRESS CONDITION THAT IT IS NOT TO BE USED FOR ANY PURPOSE OR COPIED OR COMMUNICATED TO ANY OTHER PERSON WITHOUT WRITTEN PERMISSION FROM DART AEROSPACE USA, INC.

DQA: _____ Date: _____

WORK ORDER NON-CONFORMANCE / UPDATE

QA Closed: Date: Work Order update only ☐

Work Order: _____

Part No. _____

NCR No. _____

DISPOSITION

Rework ☐
Scrap ☐
Use-as-is ☐
Suspected Unapproved ☐

AGAINST DEPARTMENT/PROCESS

Skid-tube ☐ Crosstube ☐ Water Jet ☐ Engineering ☐
Machining ☐ Small Fab ☐ Prod. Eng. Coor. ☐ Quality ☐
Thermoforming ☐ Finishing ☐ Rec/Store/Packaging ☐ Other ☐
Large Fab ☐ Composite ☐ Supplier ☐ ☐

Root Cause		Date	Step	Qty	Description of work order update or non-conformance	Initial Chief Eng	Action Description	Sign & Date	Verification	QC Inspector
Design	☐									
Doc/Data	☐									
Equip/Tooling	☐									
Handling/Pre	☐									
Material	☐									
Operator	☐									
Offset/Setup	☐									
Process	☐									
Supplier	☐									
Training	☐									
Transport	☐									
Unapproved	☐									

FAULT CATEGORY

Landing Gear

☐ Bending
☐ Centre Not Concentric
☐ Cracks
☐ Crimp/Kink/Ripple/Wave
☐ Cuffs
☐ Crushing
☐ Heat Treat
☐ Inspection Strip in Tube
☐ Marks/Chatter
☐ Turning Sequence
☐ Wave/Twist in Tube

General

☐ Bend
☐ BOM/Route
☐ Broken/Damage/Defect
☐ Burrs
☐ Contamination
☐ Countersink
☐ Cut Too Short
☐ Drawing
☐ Drill Holes
☐ Finish
☐ Fit/Function

☐ Folio/Program
☐ Grain
☐ Hardware
☐ Inspection Incomplete/Unqualified
☐ Instructions Incomplete/Unclear
☐ Misaligned/off center
☐ Mislabeled
☐ Misread
☐ Off-set
☐ Out of Calibration
☐ Out of Sequence

☐ Outside Dimensions
☐ Over/Under tolerance
☐ Part Incorrect
☐ Part Lost/Missing
☐ Part Moved
☐ Positioned Wrong
☐ Power Loss/Surge

☐ Pressure/Forced
☐ Set-up
☐ Temperature/Cure
☐ Weld
☐ Wrong Stock Pulled

☐ Other

PRELIMINARY ISSUE

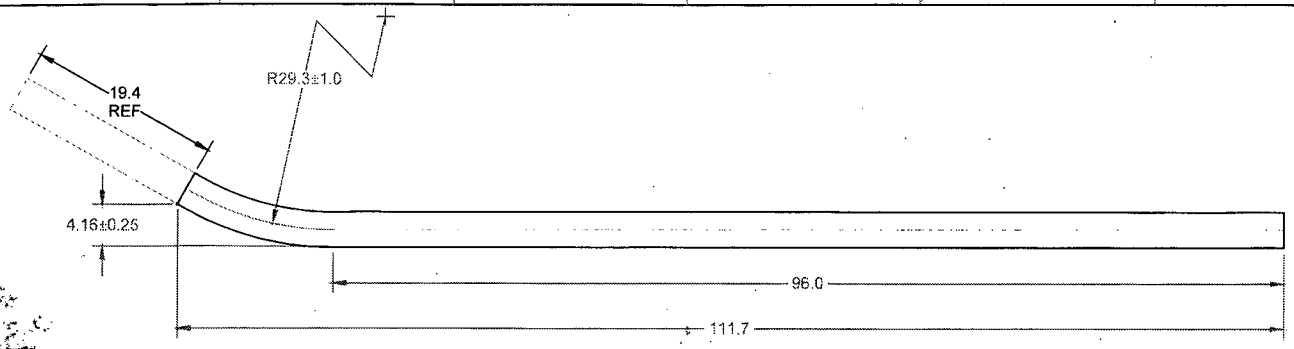

D4680-1 SKIDTUBE BENDING/TRIMMING DETAIL

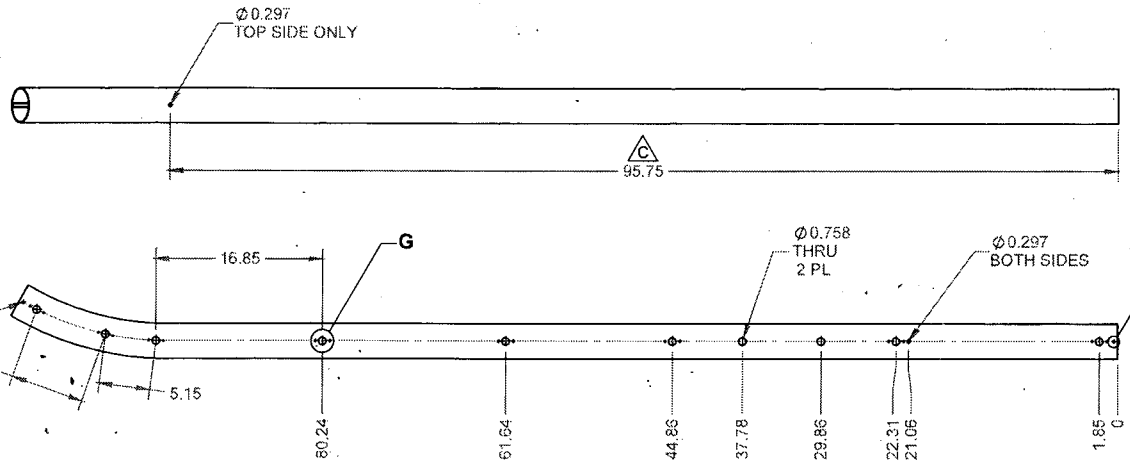

D4680-1 SKIDTUBE DRILLING DETAIL

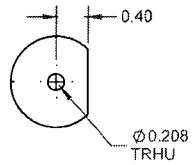

DETAIL H
SCALE 8X
2 PL

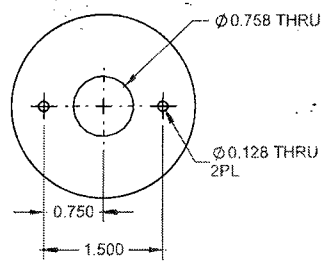

DETAIL G
SCALE 8X
8 PL

NOTES:
1) MATERIAL: MAKE FROM D2962-150 EXTRUSION
2) FINISH: CHEMICAL CONVERSION COAT PER DART QSI 005 4.1
3) TOLERANCES: PER DART QSI 018 UNLESS OTHERWISE NOTED
4) UNITS: INCHES UNLESS OTHERWISE NOTED
5) BREAK SHARP EDGES: 0.005 TO 0.010 MAX
6) IDENTIFICATION: NONE
7) WEIGHT: 11.36 lbs

PRELIMINARY ISSUE

DESIGN	AP	DART AEROSPACE USA, INC.
DRAWN	AP	KENT, WA
CHECKED	AJS	DRAWING NO. D4680 REV. C2
MFG. APPR.	DD	SHEET 3 OF 3
APPROVED		TITLE SKIDTUBE SCALE NTS
DE APPR.		
DATE	14.02.26	

COPYRIGHT © 2013 BY DART AEROSPACE USA, INC.
THIS DOCUMENT IS PRIVATE AND CONFIDENTIAL AND IS SUPPLIED ON THE EXPRESS CONDITION THAT IT IS NOT TO BE USED FOR ANY PURPOSE OR COPIED OR COMMUNICATED TO ANY OTHER PERSON WITHOUT WRITTEN PERMISSION FROM DART AEROSPACE USA, INC.

DQA: _____ Date: _____

DART AEROSPACE

WORK ORDER NON-CONFORMANCE / UPDATE

QA Closed: Date: Work Order update only ☐

Work Order: _____

Part No. _____

NCR No. _____

DISPOSITION

- Rework ☐
- Scrap ☐
- Use-as-is ☐
- Suspected Unapproved ☐

AGAINST DEPARTMENT/PROCESS

- Skid-tube ☐
- Machining ☐
- Thermoforming ☐
- Large Fab ☐
- Crosstube ☐
- Small Fab ☐
- Finishing ☐
- Composite ☐
- Water Jet ☐
- Prod. Eng. Coor. ☐
- Rec/Store/Packaging ☐
- Supplier ☐
- Engineering ☐
- Quality ☐
- Other ☐

Root Cause		Date	Step	Qty	Description of work order update or non-conformance	Initial Chief Eng	Action Description	Sign & Date	Verification	QC Inspector
Design	☐									
Doc/Data	☐									
Equip/Tooling	☐									
Handling/Pre	☐									
Material	☐									
Operator	☐									
Offset/Setup	☐									
Process	☐									
Supplier	☐									
Training	☐									
Transport	☐									
Unapproved	☐									

FAULT CATEGORY

Landing Gear

- ☐ Bending
- ☐ Centre Not Concentric
- ☐ Cracks
- ☐ Crimp/Kink/Ripple/Wave
- ☐ Cuffs
- ☐ Crushing
- ☐ Heat Treat
- ☐ Inspection Strip in Tube
- ☐ Marks/Chatter
- ☐ Turning Sequence
- ☐ Wave/Twist in Tube

General

- ☐ Bend
- ☐ BOM/Route
- ☐ Broken/Damage/Defect
- ☐ Burrs
- ☐ Contamination
- ☐ Countersink
- ☐ Cut Too Short
- ☐ Drawing
- ☐ Drill Holes
- ☐ Finish
- ☐ Fit/Function
- ☐ Folio/Program
- ☐ Grain
- ☐ Hardware
- ☐ Inspection Incomplete/Unqualified
- ☐ Instructions Incomplete/Unclear
- ☐ Misaligned/off center
- ☐ Mislabeled
- ☐ Misread
- ☐ Off-set
- ☐ Out of Calibration
- ☐ Out of Sequence
- ☐ Outside Dimensions
- ☐ Over/Under tolerance
- ☐ Part Incorrect
- ☐ Part Lost/Missing
- ☐ Part Moved
- ☐ Positioned Wrong
- ☐ Power Loss/Surge
- ☐ Pressure/Forced
- ☐ Set-up
- ☐ Temperature/Cure
- ☐ Weld
- ☐ Wrong Stock Pulled
- ☐ Other _____

Linda Lacelle

From: Mike Petsche
Sent: July-29-13 12:50 AM
To: Bill Beckett; David Shepherd
Cc: Linda Lacelle; Chris Provencal; Nigel Forbes; Eric Downing
Subject: RE: Deviation: D4680-PB1.pdf

Yeah...that may have been a conversation between Alex and I at one point. I don't remember exactly....but I may have steered him wrong, trying anticipate the future of "DART skidtube finishing". In all likelihood, one day we may spray paint all skidtubes, but in reality, I guess we aren't there yet. I was probably trying to be clever. No good ever comes of that.

-----Original Message-----
From: Bill Beckett
Sent: Monday, July 29, 2013 12:26 AM
To: David Shepherd
Cc: Mike Petsche; Linda Lacelle; Chris Provencal; Nigel Forbes; Eric Downing
Subject: Re: Deviation: D4680-PB1.pdf

David - Agreed.
Bill

Sent from my iPhone

On 2013-07-28, at 18:08, "David Shepherd" <dshepherd@dartaero.com> wrote:

> Bill,
>
> The drawings for the EC145 Standard Skidtubes are calling up prime and paint. I think this was a mistake. I think the prime and paint should have been for the EC145 Float Skidtubes only. Are you in agreement?
>
> If so, then we should proceed with powder coating the EC145 Standard Skidtubes that are currently in production. We have a number of drawing corrections to make once we receive the STC anyways.
>
> Regards,
> David
>

>
> -----Original Message-----
> From: Chris Provencal
> Sent: July-25-13 12:15 PM
> To: David Shepherd
> Cc: Mike Petsche; Linda Lacelle
> Subject: Deviation: D4680-PB1.pdf
>
>
> Mike/David,
>
> They are making a D4680-041 tube to prelim rev. PB1 (Alex). The dwg (rev. A & PB1) is calling up specifically Sherwin Williams primer/paint.
>
> They want to substitute with Desoto primer, per QSI 005, which is for float tubes and one of the Imron paints. The Sherwin primer shows up in our QSI as a normal, non-float, primer for regular skids. Therefore I am thinking that any of the normal primers is an acceptable substitution per QSI 005 4.2.1.3.2.
>
> I have no idea why the Sherwin primer is being specifically called up. Was this some customer requirement? I was hoping for some input before I allow it to be changed. Thanks.
>
> -Chris

ITEM	QTY -041	P/N	DESCRIPTION
	X	D4680-041	SKIDTUBE
1	1	D2965	CAP
2	1	D2965-3	CAP
3	4	D3492-055	PLUG ASSY
4	1	D4680-043	SKIDTUBE SUB ASSY
5	2	AN3C5A	BOLT
6	2	AN526C1032R10	SCREW
7	2	NAS1149F0332P	WASHER (AN960-10L)

C

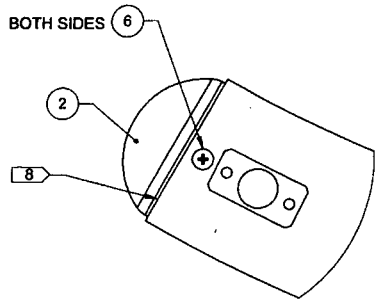

DETAIL A
SCALE 4X

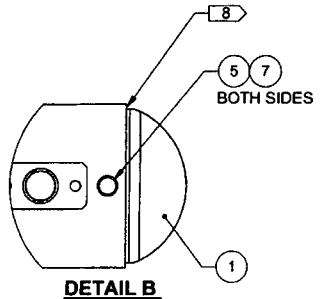

DETAIL B
SCALE 4X

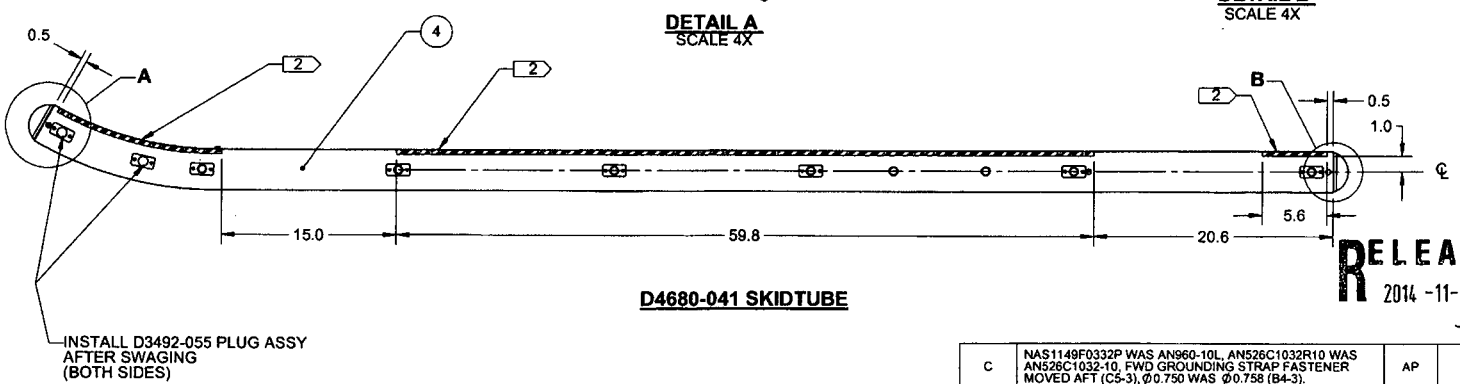

D4680-041 SKIDTUBE

RELEASED
2014 -11- 20

NOTES:
1) MATERIAL: N/A
2) FINISH: PAINT TOP SURFACE OF SKIDTUBE WITH MIL-W-5044 ANTI-SKID PAINT (WING WALK) AS INDICATED TO 1.00 ABOVE CENTERLINE PER QSI 005 SECTION 4.4
3) TOLERANCES: PER DART QSI 018 UNLESS OTHERWISE NOTED
4) UNITS: INCHES UNLESS OTHERWISE NOTED
5) BREAK SHARP EDGES: N/A
6) IDENTIFICATION: IDENTIFY WITH DART P/N "D4680-041" AND B/N PER QSI 044 METHOD 6.4 ON INNER RADIUS OF SKIDTUBE BEFORE INSTALLING D2965 CAP
7) WEIGHT: 18.56 lbs
8) SEAL FAYING SURFACES WITH SIKAFLEX -241/-291 OR PROSEAL 890 OR MIL-S-8802 CLASS B-2 SEALANT

REV.	DESCRIPTION	BY	DATE
C	NAS1149F0332P WAS AN960-10L, AN526C1032R10 WAS AN526C1032-10, FWD GROUNDING STRAP FASTENER MOVED AFT (C5-3), Ø0.750 WAS Ø0.758 (B4-3).	AP	14.07.29
B	FWD CAP WAS D2965 NOW D2965-3, VARIOUS DIMENSIONAL CHANGES. D3492-055 PLUG ASSY WAS D3492-051, SWAGING DIMENSION NOW 0.650 WAS 0.661 (D6-2), ADDED DETAIL H (C2-3), MATERIAL D2962-150 WAS D2962-131 (A7-3), GROUND HANDLING THRU HOLES NOW WELDED, ADDED SECTION G-G (D3-2)	AP	13.09.10
A	NEW ISSUE	AP	13.02.13

APPROVED

DESIGN	AP	DART AEROSPACE USA, INC. KENT, WA
DRAWN	AP	
CHECKED	ML	DRAWING NO. D4680 REV. C
MFG. APPR.	JLM	SHEET 1 OF 3
APPROVED	MP	TITLE SKIDTUBE SCALE NTS
DE APPR.	DS	
DATE	14.07.29	

COPYRIGHT © 2013 BY DART AEROSPACE USA, INC.
THIS DOCUMENT IS PRIVATE AND CONFIDENTIAL AND IS SUPPLIED ON THE EXPRESS CONDITION THAT IT IS NOT TO BE USED FOR ANY PURPOSE OR COPIED OR COMMUNICATED TO ANY OTHER PERSON WITHOUT WRITTEN PERMISSION FROM DART AEROSPACE USA, INC.

DQA: _____ Date: _____

WORK ORDER NON-CONFORMANCE / UPDATE

DART AEROSPACE

QA Closed: Date: Work Order update only ☐

Work Order: _____

Part No. _____

NCR No. _____

DISPOSITION

Rework ☐
Scrap ☐
Use-as-is ☐
Suspected Unapproved ☐

AGAINST DEPARTMENT/PROCESS

Skid-tube ☐ Crosstube ☐ Water Jet ☐ Engineering ☐
Machining ☐ Small Fab ☐ Prod. Eng. Coor. ☐ Quality ☐
Thermoforming ☐ Finishing ☐ Rec/Store/Packaging ☐ Other ☐
Large Fab ☐ Composite ☐ Supplier ☐

Root Cause		Date	Step	Qty	Description of work order update or non-conformance	Initial Chief Eng	Action Description	Sign & Date	Verification	QC Inspector
Design	☐									
Doc/Data	☐									
Equip/Tooling	☐									
Handling/Pre	☐									
Material	☐									
Operator	☐									
Offset/Setup	☐									
Process	☐									
Supplier	☐									
Training	☐									
Transport	☐									
Unapproved	☐									

FAULT CATEGORY

Landing Gear

☐ Bending
☐ Centre Not Concentric
☐ Cracks
☐ Crimp/Kink/Ripple/Wave
☐ Cuffs
☐ Crushing
☐ Heat Treat
☐ Inspection Strip in Tube
☐ Marks/Chatter
☐ Turning Sequence
☐ Wave/Twist in Tube

General

☐ Bend
☐ BOM/Route
☐ Broken/Damage/Defect
☐ Burrs
☐ Contamination
☐ Countersink
☐ Cut Too Short
☐ Drawing
☐ Drill Holes
☐ Finish
☐ Fit/Function
☐ Folio/Program
☐ Grain
☐ Hardware
☐ Inspection Incomplete/Unqualified
☐ Instructions Incomplete/Unclear
☐ Misaligned/off center
☐ Mislabeled
☐ Misread
☐ Off-set
☐ Out of Calibration
☐ Out of Sequence
☐ Outside Dimensions
☐ Over/Under tolerance
☐ Part Incorrect
☐ Part Lost/Missing
☐ Part Moved
☐ Positioned Wrong
☐ Power Loss/Surge
☐ Pressure/Forced
☐ Set-up
☐ Temperature/Cure
☐ Weld
☐ Wrong Stock Pulled
☐ Other

_____
_____
_____

ITEM	QTY -043	P/N	DESCRIPTION
	X	D4680-043	SKIDTUBE SUB ASSY
1	2	D2973	SPACER
2	1	D4680-1	SKIDTUBE
3	1	D4681-041	WEB ASSY
4	8	D4686-1	SPACER
5	16	D4753-1	DOUBLER
6	3	AELS-1032-130	INSERT
7	3	AN3C4A	BOLT
8	32	MS20601AD4W3	RIVET, BLIND, CSK
9	3	NAS1149F0332P	WASHER (AN960-10L)

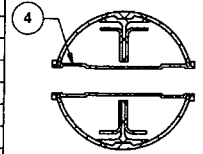

INSTALL D4686-1 SPACER AS FOLLOWS (8 PL)
AFTER INSTALLING D4753-1 DOUBLERS PER DETAIL D
1. INSERT D4686-1 SPACER
2. SWAGE TO ⌀0.650 +0.010/-0.000 X 1.0 DEEP PER QSI 002
3. TRIM/GRIND FLUSH PER QSI 002

C

SECTION C-C 10
SCALE 4X
8 PL

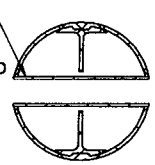

INSTALL D2973 SPACER AS FOLLOWS (2 PL)
1. CHAMFER HOLE 0.030X45 DEG
2. INSERT D2973 SPACER
3. WELD INTO PLACE AND GRIND FLUSH
4. PASS ⌀0.625 DRILL TO REMOVE SPILL OVER

SECTION G-G 11
SCALE 4X
2 PL

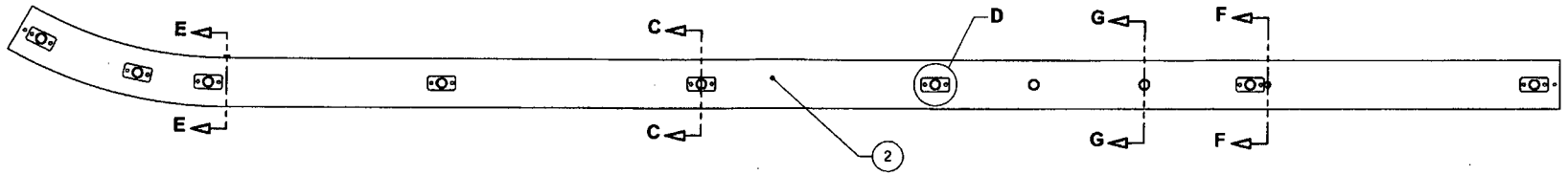

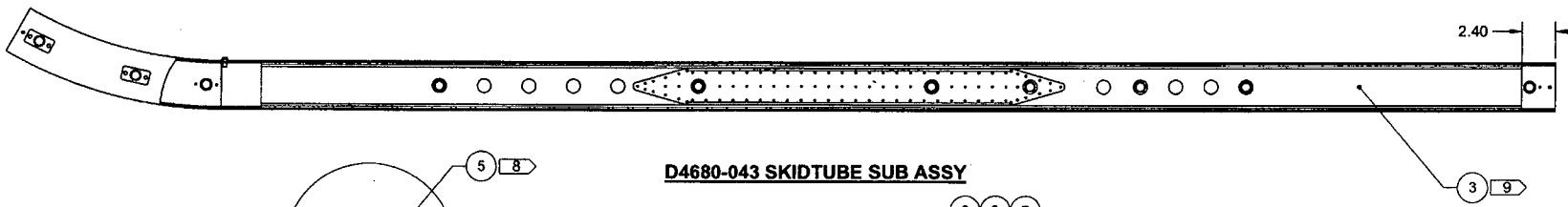

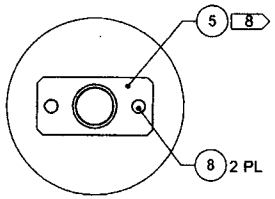

DETAIL D
16 PL (BOTH SIDES)
SCALE 4X

D4680-043 SKIDTUBE SUB ASSY

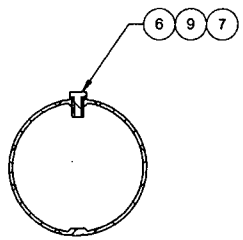

SECTION E-E
SCALE 2.5X

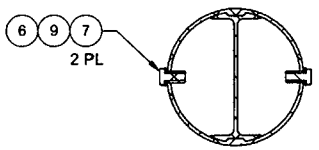

SECTION F-F
SCALE 2.5X

RELEASED
2014 -11- 20

NOTES:
1) MATERIAL: N/A
2) FINISH: APPLY CHEMICAL CONVERSION COATING PER DART QSI 005 4.1 PRIOR TO INSTALLING D4681-041 WEB. POWDER COAT WHITE (REF 4.3.5.1) PER DART QSI 005 4.3
3) TOLERANCES: PER DART QSI 018 UNLESS OTHERWISE NOTED
4) UNITS: INCHES UNLESS OTHERWISE NOTED
5) BREAK SHARP EDGES: N/A
6) IDENTIFICATION: NONE
7) WEIGHT: 17.91 lbs
8) SEAL ALL MATING SURFACES USING PROSEAL 890 OR MIL-S-8802 CLASS B2 SEALANT
9) INSERT D4681-041 WEB INTO D4680-1 SKIDTUBE IN LOCATION SHOWN OFF AFT END OF SKIDTUBE AND BOND WEB INTO OUTER TUBE WITH NON-STRUCTURAL SIKAFLEX -241/-291 ADHESIVE PER DART QSI 015
10) INSTALL D4686-1 SPACER AFTER INSTALLING D4753-1 DOUBLERS
11) WELDING: PER QSI 004

APPROVED

DESIGN	AP	DART AEROSPACE USA, INC. KENT, WA
DRAWN	AP	
CHECKED	ML	DRAWING NO. D4680 REV. C
MFG. APPR.	JLM	SHEET 2 OF 3
APPROVED	MP	TITLE SKIDTUBE SCALE NTS
DE APPR.	DS	
DATE	14.07.29	

COPYRIGHT © 2013 BY DART AEROSPACE USA, INC.
THIS DOCUMENT IS PRIVATE AND CONFIDENTIAL AND IS SUPPLIED ON THE EXPRESS CONDITION THAT IT IS NOT TO BE USED FOR ANY PURPOSE OR COPIED OR COMMUNICATED TO ANY OTHER PERSON WITHOUT WRITTEN PERMISSION FROM DART AEROSPACE USA, INC.

DQA: _____ Date: _____

WORK ORDER NON-CONFORMANCE / UPDATE

DART AEROSPACE

QA Closed: Date: Work Order update only ☐

Work Order: _____

Part No. _____

NCR No. _____

DISPOSITION

Rework ☐
Scrap ☐
Use-as-is ☐
Suspected Unapproved ☐

AGAINST DEPARTMENT/PROCESS

Skid-tube ☐ Crosstube ☐ Water Jet ☐ Engineering ☐
Machining ☐ Small Fab ☐ Prod. Eng. Coor. ☐ Quality ☐
Thermoforming ☐ Finishing ☐ Rec/Store/Packaging ☐ Other ☐
Large Fab ☐ Composite ☐ Supplier ☐

Root Cause		Date	Step	Qty	Description of work order update or non-conformance	Initial Chief Eng	Action Description	Sign & Date	Verification	QC Inspector
Design	☐									
Doc/Data	☐									
Equip/Tooling	☐									
Handling/Pre	☐									
Material	☐									
Operator	☐									
Offset/Setup	☐									
Process	☐									
Supplier	☐									
Training	☐									
Transport	☐									
Unapproved	☐									

FAULT CATEGORY

Landing Gear

☐ Bending
☐ Centre Not Concentric
☐ Cracks
☐ Crimp/Kink/Ripple/Wave
☐ Cuffs
☐ Crushing
☐ Heat Treat
☐ Inspection Strip in Tube
☐ Marks/Chatter
☐ Turning Sequence
☐ Wave/Twist in Tube

General

☐ Bend
☐ BOM/Route
☐ Broken/Damage/Defect
☐ Burrs
☐ Contamination
☐ Countersink
☐ Cut Too Short
☐ Drawing
☐ Drill Holes
☐ Finish
☐ Fit/Function
☐ Folio/Program
☐ Grain
☐ Hardware
☐ Inspection Incomplete/Unqualified
☐ Instructions Incomplete/Unclear
☐ Misaligned/off center
☐ Mislabeled
☐ Misread
☐ Off-set
☐ Out of Calibration
☐ Out of Sequence
☐ Outside Dimensions
☐ Over/Under tolerance
☐ Part Incorrect
☐ Part Lost/Missing
☐ Part Moved
☐ Positioned Wrong
☐ Power Loss/Surge
☐ Pressure/Forced
☐ Set-up
☐ Temperature/Cure
☐ Weld
☐ Wrong Stock Pulled
☐ Other

_____
_____
_____

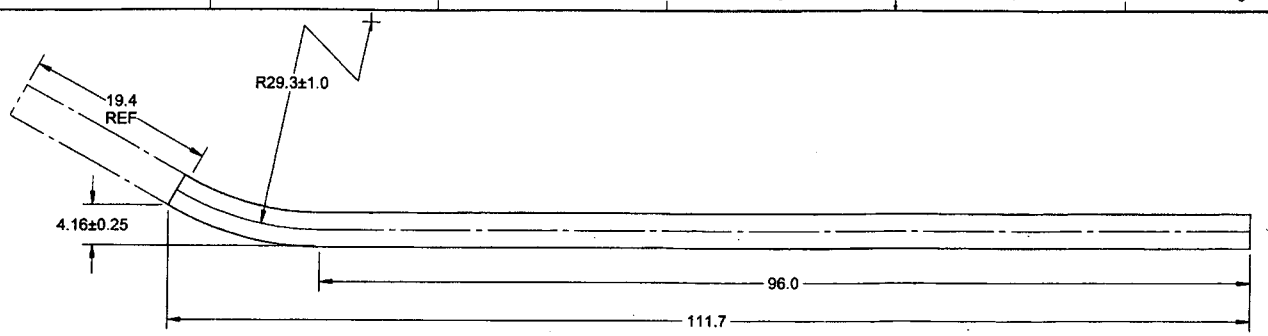

D4680-1 SKIDTUBE BENDING/TRIMMING DETAIL

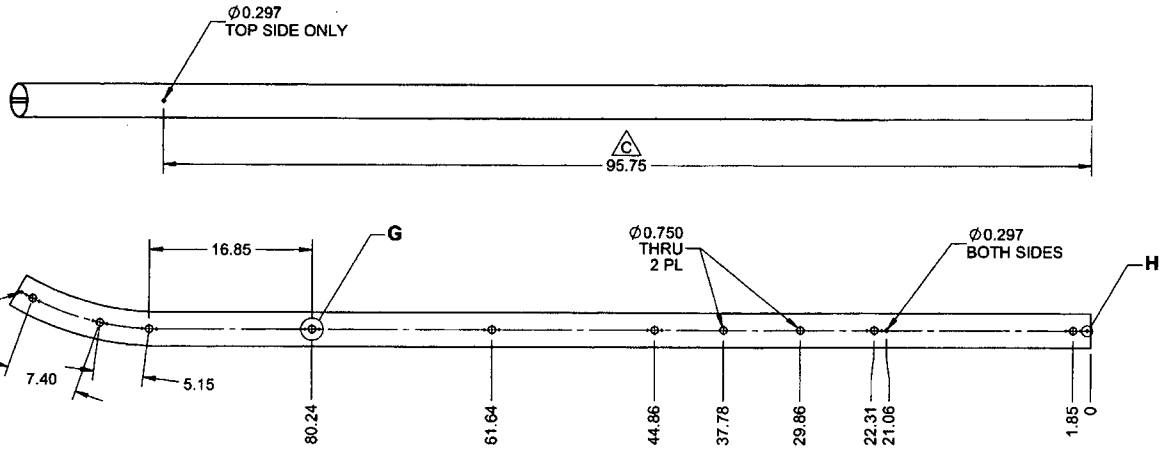

D4680-1 SKIDTUBE DRILLING DETAIL

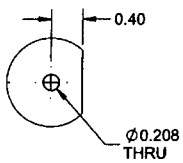

DETAIL H
SCALE 8X
2 PL

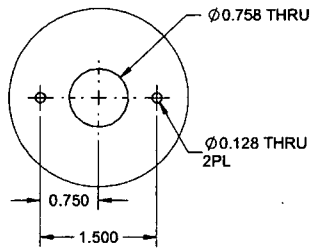

DETAIL G
SCALE 8X
8 PL

RELEASED
2014 -11- 20

NOTES:
1) MATERIAL: MAKE FROM D2962-150 EXTRUSION
2) FINISH: CHEMICAL CONVERSION COAT PER DART QSI 005 4.1
3) TOLERANCES: PER DART QSI 018 UNLESS OTHERWISE NOTED
4) UNITS: INCHES UNLESS OTHERWISE NOTED
5) BREAK SHARP EDGES: 0.005 TO 0.010 MAX
6) IDENTIFICATION: NONE
7) WEIGHT: 11.36 lbs

APPROVED

DESIGN	AP	DART AEROSPACE USA, INC. KENT, WA
DRAWN	AP	
CHECKED	ML	DRAWING NO. D4680 REV. C
MFG. APPR.	JLM	SHEET 3 OF 3
APPROVED	MP	TITLE SKIDTUBE SCALE NTS
DE APPR.	DS	
DATE	14.07.29	

COPYRIGHT © 2013 BY DART AEROSPACE USA, INC.
THIS DOCUMENT IS PRIVATE AND CONFIDENTIAL AND IS SUPPLIED ON THE EXPRESS CONDITION THAT IT IS NOT TO BE USED FOR ANY PURPOSE OR COPIED OR COMMUNICATED TO ANY OTHER PERSON WITHOUT WRITTEN PERMISSION FROM DART AEROSPACE USA, INC.

DQA: _____ Date: _____

DART AEROSPACE

WORK ORDER NON-CONFORMANCE / UPDATE

QA Closed: Date: Work Order update only ☐

Work Order: _____

Part No. _____

NCR No. _____

DISPOSITION

- Rework ☐
- Scrap ☐
- Use-as-is ☐
- Suspected Unapproved ☐

AGAINST DEPARTMENT/PROCESS

- Skid-tube ☐
- Machining ☐
- Thermoforming ☐
- Large Fab ☐
- Crosstube ☐
- Small Fab ☐
- Finishing ☐
- Composite ☐
- Water Jet ☐
- Prod. Eng. Coor. ☐
- Rec/Store/Packaging ☐
- Supplier ☐
- Engineering ☐
- Quality ☐
- Other ☐

Root Cause		Date	Step	Qty	Description of work order update or non-conformance	Initial Chief Eng	Action Description	Sign & Date	Verification	QC Inspector
Design	☐									
Doc/Data	☐									
Equip/Tooling	☐									
Handling/Pre	☐									
Material	☐									
Operator	☐									
Offset/Setup	☐									
Process	☐									
Supplier	☐									
Training	☐									
Transport	☐									
Unapproved	☐									

FAULT CATEGORY

Landing Gear

- ☐ Bending
- ☐ Centre Not Concentric
- ☐ Cracks
- ☐ Crimp/Kink/Ripple/Wave
- ☐ Cuffs
- ☐ Crushing
- ☐ Heat Treat
- ☐ Inspection Strip in Tube
- ☐ Marks/Chatter
- ☐ Turning Sequence
- ☐ Wave/Twist in Tube

General

- ☐ Bend
- ☐ BOM/Route
- ☐ Broken/Damage/Defect
- ☐ Burrs
- ☐ Contamination
- ☐ Countersink
- ☐ Cut Too Short
- ☐ Drawing
- ☐ Drill Holes
- ☐ Finish
- ☐ Fit/Function
- ☐ Folio/Program
- ☐ Grain
- ☐ Hardware
- ☐ Inspection Incomplete/Unqualified
- ☐ Instructions Incomplete/Unclear
- ☐ Misaligned/off center
- ☐ Mislabeled
- ☐ Misread
- ☐ Off-set
- ☐ Out of Calibration
- ☐ Out of Sequence
- ☐ Outside Dimensions
- ☐ Over/Under tolerance
- ☐ Part Incorrect
- ☐ Part Lost/Missing
- ☐ Part Moved
- ☐ Positioned Wrong
- ☐ Power Loss/Surge
- ☐ Pressure/Forced
- ☐ Set-up
- ☐ Temperature/Cure
- ☐ Weld
- ☐ Wrong Stock Pulled
- ☐ Other _____

DART AEROSPACE LTD		Work Order:	B122134
Description:	Stud tube assembly	Part Number:	D4680-044
Inspection Dwg:	D4680 Rev: C		Page 1 of 1

FIRST ARTICLE INSPECTION CHECKLIST

Drawing Dimension	Tolerance	Actual Dimension	Accept	Reject	Method of Inspection	Comments
7.40	+/-0.030	7.40	✓		QT-17	
5.15	+/- "	5.15	✓			
16.85	+/- "	16.85	✓			
80.24	+/- "	80.24	✓			
61.64	+/- "	61.64	✓			
44.86	+/- "	44.86	✓			
37.78	+/- "	37.78	✓			
29.86	+/- "	29.86	✓			
22.31	+/- "	22.31	✓			
21.06	+/- "	21.06	✓			
1.85	+/- "	1.85	✓			

Measured by:	[signature]
Date:	14/12/18

Audited by:	[signature]
Date:	14/12/18

Preliminary Approval:	
Date:	

Rev	Date	Change	Revised by	Approved
E	10.04.14	Added preliminary approval	KJ	